Benelli

Despieces 2014

RAFFAELLO

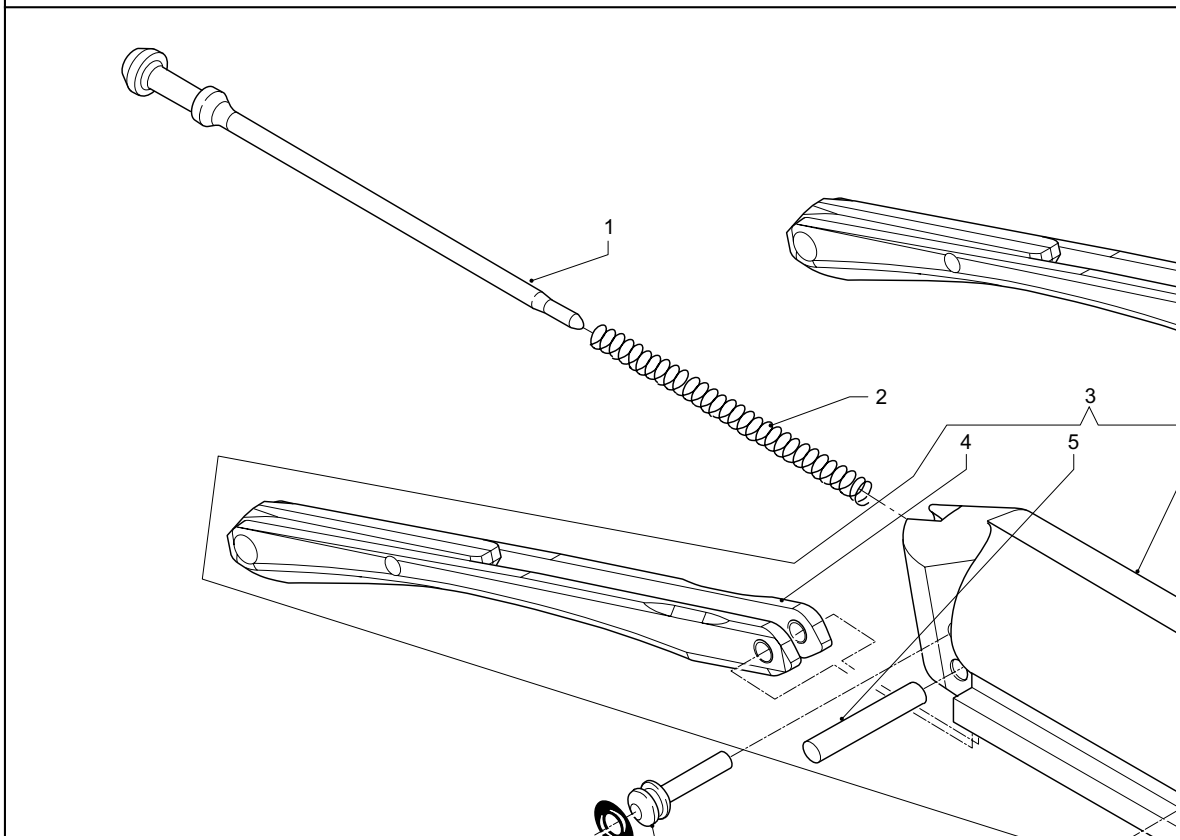

nº1

INDICE

01 Super 90 - Montefeltro ..... Página 4

02 Raffaello ..... Página 14
Raffaello Black - P.B. ..... Página 27

03 Super Black Eagle - Super Black Eagle II 34

04 M1 - M2 ..... Página 43

05 M3 Super 90 ..... Página 54

06 M4 Super 90 ..... Página 64

07 SL 80 - Pasión - Premium - Premium Plus 70
Bellmonte

10 Vinci - SuperVinci ..... Página 78

20 Nova - SuperNova ..... Página 85

30 Argo ..... Página 92

40 MP 90S - MP 95E ..... Página 100

50 Kite ..... Página 106

LEYENDA

● = Pieza original colocada en modelo standard

A = Empieza desde el nº M104801 (SUPER 90 - MONTEFELTRO M2 - M3)
F031005 (RAFFAELLO)
00594R (KITE)

B = Empieza dese el nº M155400 (M2)
00596R (KITE)

C = Empieza desde el nº M096546 (M3)

D = Empieza desde el nº: M495515 (SUPER 90 - MONTEFELTRO)
M493911 (M2)
U195506 (S.B.E.)

E = Empieza desde el nº: M495515 (M3)

F = Empieza desde el nº: M765197Z (M3)

G = Empieza desde el nº: M760229 (M2 - SUPER 90 - MONTEFELTRO)
N125478 (M2 - SUPER 90 - MONTEFELTRO)

s.p.n.s. = Cambio con la autorización de Benelli

* = Artículo que no se vende separado del cañón

GUIA PARA SEGUIR EL CATÁLOGO DE REPUESTOS BENELLI

COMO LEER LAS TABLAS

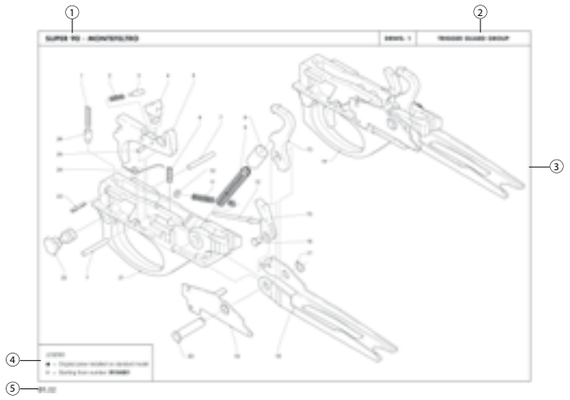

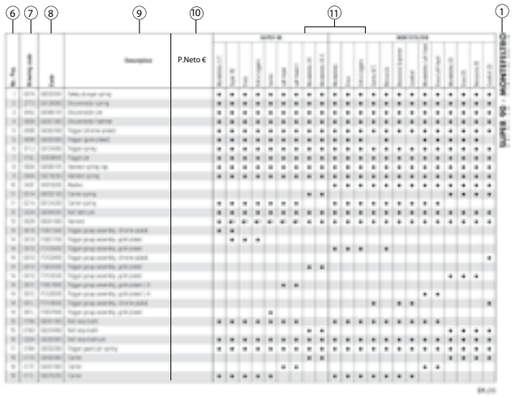

Con la ayuda de la figura vamos a leer las indicaciones que aparecen en cada tabla:

1) Gama
2) Grupo
3) Dibujo del despiece
4) Anotaciones sobre numeraciones de escopetas
5) numeración del dibujo identificable con dos dígitos que significan:
   - 01. Gama
   - 02 Numeración progresiva de la página
6) Número de posición: identifica la posición en el despiece
7) Código Manual: el código que viene en el manual de instrucciones de cada arma
8) Código Proveedor: Código para hacer el pedido de la pieza
9) Descripción (en inglés)
10) Precio Venta Neto €
11) Modelos de escopeta

01

SUPER 90

MONTEFELTRO (OLD TYPE)
SUPER 90
DUCA
EXTRA LEGGERO
CENTRO
LEFT HAND
LEFT HAND E
MONTEFELTRO 20
MONTEFELTRO 20 E

MONTEFELTRO

MONTEFELTRO
DUCA
EXTRA LEGGERO
CENTRO (NEW TYPE)
BECCACCIA
BECCACCIA SUPREME
COMFORT
MONTEFELTRO LEFT HAND
DUCA LEFT HAND
MONTEFELTRO 20
DUCA 20
BECCACCIA 20
COMFORT 20

01.01

SUPER 90 - MONTEFELTRO | DRWG. 1 | TRIGGER GUARD GROUP

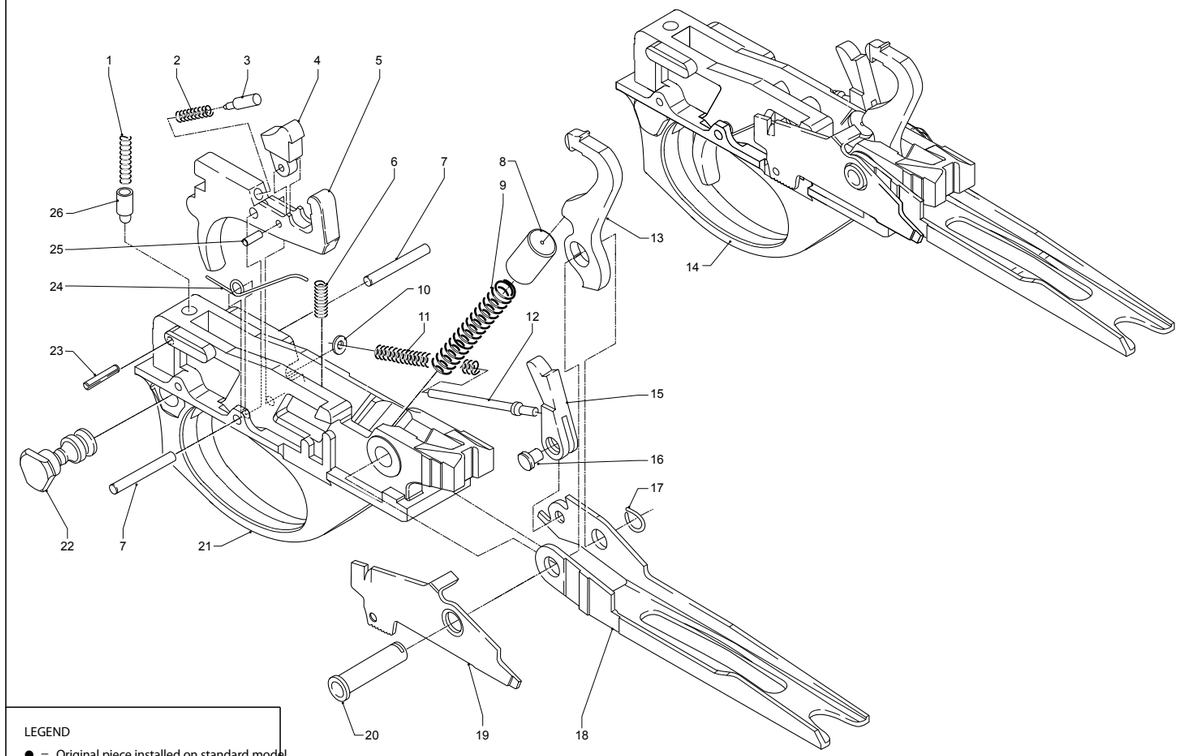

LEGEND
● = Original piece installed on standard model
A = Starting from number M104801

01.02

No. Pos.	Código Manual	Código Proveedor	Descripción	P. Neto €	SUPER 90									MONTEFELTRO												
					Monteféltro O.T.	Super 90	Duca	Extra Leggero	Centro	Left Hand	Left Hand E	Monteféltro 20	Monteféltro 20 E	Monteféltro	Duca	Extra Leggero	Centro N.T.	Beccaccia	Beccaccia Supreme	Comfort	Montefeltro Left Hand	Duca Left Hand	Monteféltro 20	Duca 20	Beccaccia 20	Comfort 20
1	007A	G0032001	Safety plunger spring		●	●	●	●	●	●	●	●	●	●	●	●	●	●	●	●	●	●	●	●	●	●
2	277J	G0128500	Disconnector spring		●	●	●	●	●	●	●	●	●	●	●	●	●	●	●	●	●	●	●	●	●	●
3	045J	G0089101	Disconnector pin		●	●	●	●	●	●	●	●	●	●	●	●	●	●	●	●	●	●	●	●	●	●
4	005B	G0001300	Disconnector hammer		●	●	●	●	●	●	●	●	●	●	●	●	●	●	●	●	●	●	●	●	●	●
5	009B	G0002403	Trigger (chrome-plated)		●	●	●	●	●	●	●	●	●	●	●	●	●	●	●	●	●	●	●	●	●	●
5	009B	G0002603	Trigger (gold-plated)		●	●	●	●	●	●	●	●	●	●	●	●		●			●	●	●	●	●	
6	011J	G0124000	Trigger spring		●	●	●	●	●	●	●	●	●	●	●	●	●	●	●	●	●	●	●	●	●	●
7	010L	90008800	Trigger pin		●	●	●	●	●	●	●	●	●	●	●	●	●	●	●	●	●	●	●	●	●	●
8	003A	G0000101	Hammer spring cap		●	●	●	●	●	●	●	●	●	●	●	●	●	●	●	●	●	●	●	●	●	●
9	004A	G0218200	Hammer spring		●	●	●	●	●	●	●	●	●	●	●	●	●	●	●	●	●	●	●	●	●	●
10	243F	90010200	Washer											●	●	●	●	●	●	●	●	●	●	●	●	●
11	021A	G0032100	Carrier spring									●	●										●	●	●	●
11	021A	G0124200	Carrier spring		●	●	●	●	●	●	●			●	●	●	●	●	●	●	●	●				
12	022A	G0004301	Bolt latch pin		●	●	●	●	●	●	●	●	●	●	●	●	●	●	●	●	●	●	●	●	●	●
13	002B	G0001000	Hammer		●	●A	●A	●A	●A	●A	●A	●	●	●	●	●	●	●	●	●	●	●	●	●	●	●
14	001B	F0001301	Trigger group assembly, chrome-plated		●	●																				
14	001B	F0001700	Trigger group assembly, gold-plated			●	●	●																		
14	001B	F0120400	Trigger group assembly, gold-plated											●	●	●		●								
14	001D	F0133400	Trigger group assembly, chrome-plated																							●
14	001D	F0002000	Trigger group assembly, gold-plated									●	●													
14	001D	F0133500	Trigger group assembly, gold-plated																				●	●	●	
14	001E	F0001800	Trigger group assembly, gold-plated L.H.							●	●															
14	001E	F0120500	Trigger group assembly, gold-plated L.H.																		●	●				
14	001L	F0118500	Trigger group assembly, chrome-plated														●		●	●						●
14	001L	F0037900	Trigger group assembly, gold-plated						●																	
15	019A	G0001400	Bolt stop tooth		●	●	●	●	●	●	●			●	●	●	●	●	●	●	●	●				
15	019D	G0224900	Bolt stop tooth									●	●										●	●	●	●
16	020A	G0003900	Bolt stop tooth pin		●	●	●	●	●	●	●	●	●	●	●	●	●	●	●	●	●	●	●	●	●	●
17	018A	G0032300	Trigger guard pin spring		●	●	●	●	●	●	●	●	●	●	●	●	●	●	●	●	●	●	●	●	●	●
18	017D	G0002000	Carrier									●	●										●	●	●	●
18	017E	G0001900	Carrier							●	●										●	●				
18	017L	G0076200	Carrier		●	●	●	●	●					●	●	●	●	●	●	●						

SUPER 90 - MONTEFELTRO

SUPER 90 - MONTEFELTRO | DRWG. 1 | TRIGGER GUARD GROUP

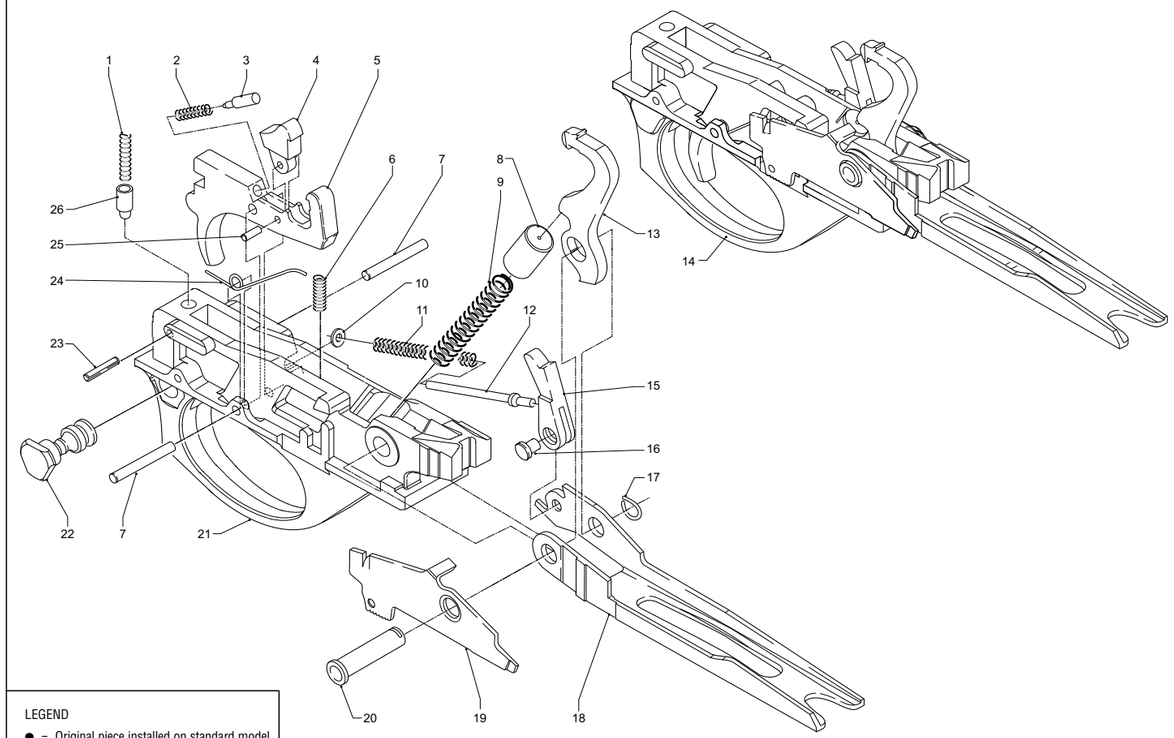

LEGEND
● = Original piece installed on standard model
A = Starting from number: **M104801**

01.04

No. Pos.	Código Manual	Código Proveedor	Descripción	P. Neto €	SUPER 90									MONTEFELTRO												
					Montefeltro O.T.	Super 90	Duca	Extra Leggero	Centro	Left Hand	Left Hand E	Montefeltro 20	Montefeltro 20 E	Montefeltro	Duca	Extra Leggero	Centro N.T.	Beccaccia	Beccaccia Supreme	Comfort	Montefeltro Left Hand	Duca Left Hand	Montefeltro 20	Duca 20	Beccaccia 20	Comfort 20
19	076D	G0003600	Cartridge drop lever									●	●										●	●	●	●
19	076L	G0076600	Cartridge drop lever		●	●	●	●	●	●	●			●	●	●	●	●	●	●	●	●				
20	016A	G0089900	Trigger pin bush		●	●	●	●	●	●	●			●	●	●	●	●	●	●	●	●				
20	016D	G0000600	Trigger pin bush									●	●										●	●	●	●
21	014B	G0002702	Trigger guard		●	●	●	●	●	●	●															
21	014B	G0208000	Trigger guard											●	●	●	●	●	●	●	●	●				
21	014D	G0003001	Trigger guard									●	●													
21	014D	G0244100	Trigger guard																				●	●	●	●
22	013J	G0123800	Hand safety button		●	●	●	●	●	●	●	●	●	●	●	●	●	●	●	●	●	●	●	●	●	●
23	012A	90003200	Safety spring retaining pin		●	●	●	●	●	●	●	●	●	●	●	●	●	●	●	●	●	●	●	●	●	●
24	077B	G0032800	Cartridge drop lever spring		●	●	●	●	●	●	●	●	●	●	●	●	●	●	●	●	●	●	●	●	●	●
25	023A	G0004001	Disconnector pin		●	●	●	●	●	●	●	●	●	●	●	●	●	●	●	●	●	●	●	●	●	●
26	008A	G0054200	Hand safety plunger		●	●	●	●	●	●	●	●	●	●	●	●	●	●	●	●	●	●	●	●	●	●

SUPER 90 - MONTEFELTRO

SUPER 90 - MONTEFELTRO | DRWG. 2 | BOLT GROUP

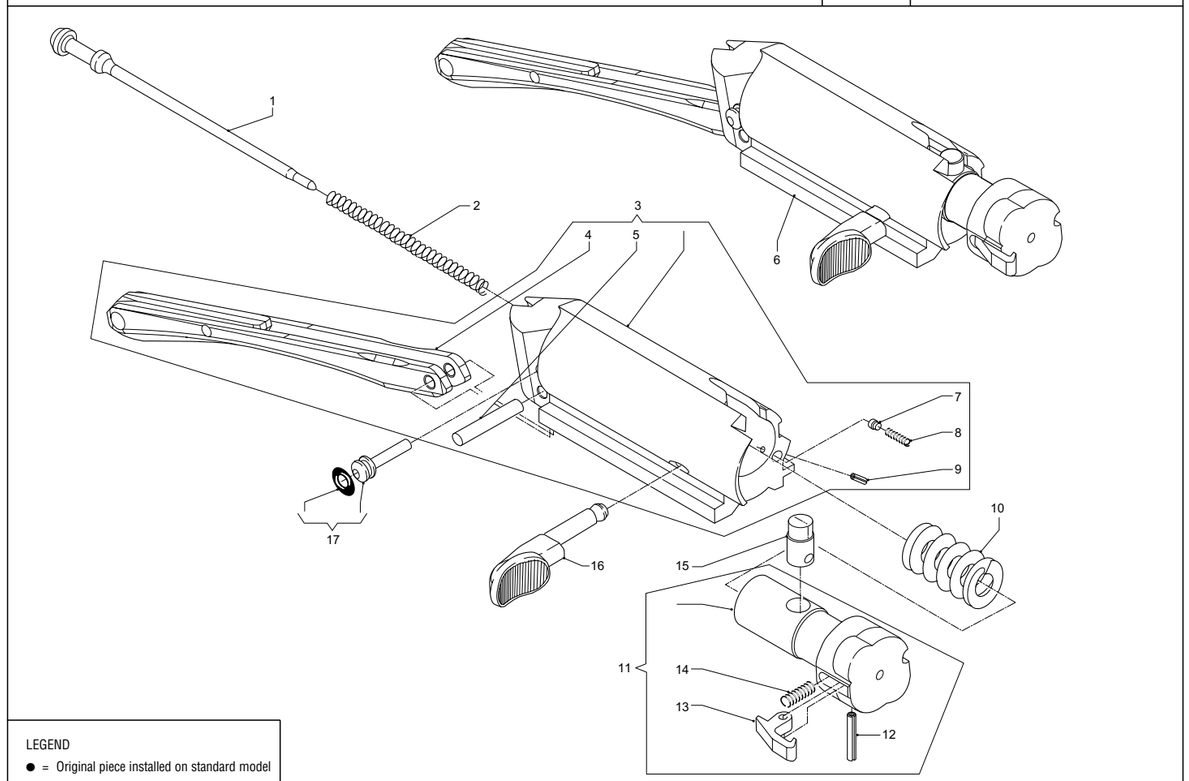

LEGEND
● = Original piece installed on standard model
A = Starting from number: **M104801**

01.06

No. Pos.	Código Manual	Código Proveedor	Descripción	P. Neto €	SUPER 90									MONTEFELTRO												
					Montefeltro O.T.	Super 90	Duca	Extra Leggero	Centro	Left Hand	Left Hand E	Montefeltro 20	Montefeltro 20 E	Montefeltro	Duca	Extra Leggero	Centro N.T.	Beccaccia	Beccaccia Supreme	Comfort	Montefeltro Left Hand	Duca Left Hand	Montefeltro 20	Duca 20	Beccaccia 20	Comfort 20
1	025B	G0007300	Firing pin		●	●																				
1	025B	G0007301	Firing pin		●A	●A	●A	●A	●A	●A	●A	●	●	●	●	●	●	●	●	●	●	●	●	●	●	●
2	037A	G0033101	Firing pin spring		●	●	●	●	●	●	●	●	●	●	●	●	●	●	●	●	●	●	●	●	●	●
3	026D	F0026700	Bolt, partial									●	●											●	●	●
3	026E	F0004100	Bolt, partial							●	●										●	●				
3	026H	F0004000	Bolt, partial		●	●	●	●	●					●	●	●	●	●	●	●						
4	027L	G0079100	Link		●	●	●	●	●	●	●	●	●	●	●	●	●	●	●	●	●	●	●	●	●	●
5	029D	G0257700	Link pin									●	●											●	●	●
5	029J	G0091400	Link pin		●	●	●	●	●	●	●			●	●	●	●	●	●	●	●	●				
6	024D	F0003200	Bolt group									●	●											●	●	●
6	024E	F0003000	Bolt group							●	●										●	●				
6	024H	F0002901	Bolt group		●	●	●	●	●					●	●	●	●	●	●	●						
7	039A	G0007500	Bolt handle pin		●	●	●	●	●	●	●	●	●	●	●	●	●	●	●	●	●	●	●	●	●	●
8	038J	G0126800	Bolt handle retaining spring		●	●	●	●	●	●	●	●	●	●	●	●	●	●	●	●	●	●	●	●	●	●
9	040A	90003800	Bolt handle spring retaining pin		●	●	●	●	●	●	●	●	●	●	●	●	●	●	●	●	●	●	●	●	●	●
10	036A	G0032901	Inertia spring		●	●	●	●	●	●	●			●	●	●	●	●	●	●	●	●				
10	036D	G0033301	Inertia spring									●	●										●	●	●	●
11	165A	F0004601	Locking head assembly		●	●	●	●	●					●	●	●	●	●	●	●						
11	165D	F0004900	Locking head assembly									●	●										●	●	●	●
11	165E	F0004701	Locking head assembly							●	●										●	●				
12	035A	90003100	Extractor pin		●	●	●	●	●	●	●			●	●	●	●	●	●	●	●	●				
12	035D	90003200	Extractor pin									●	●										●	●	●	●
13	034A	G0004901	Extractor		●	●	●	●	●			●	●	●	●	●	●	●	●	●			●	●	●	●
13	034E	G0005000	Extractor							●	●										●	●				
14	033J	G0126900	Extractor spring		●	●	●	●	●	●	●	●	●	●	●	●	●	●	●	●	●	●	●	●	●	●
15	031B	G0007900	Locking head pin		●	●	●	●	●					●	●	●	●	●	●	●						
15	031D	G0008100	Locking head pin									●	●										●	●	●	●
15	031E	G0007800	Locking head pin							●	●										●	●				
16	030D	G0005701	Bolt handle									●	●										●	●	●	●
16	030H	G0005501	Bolt handle		●	●	●	●	●	●	●			●	●	●	●	●	●	●	●	●				
17	028A	F0004501	Firing pin retaining pin		●	●	●	●	●	●	●	●	●	●	●	●	●	●	●	●	●	●	●	●	●	●

SUPER 90 - MONTEFELTRO

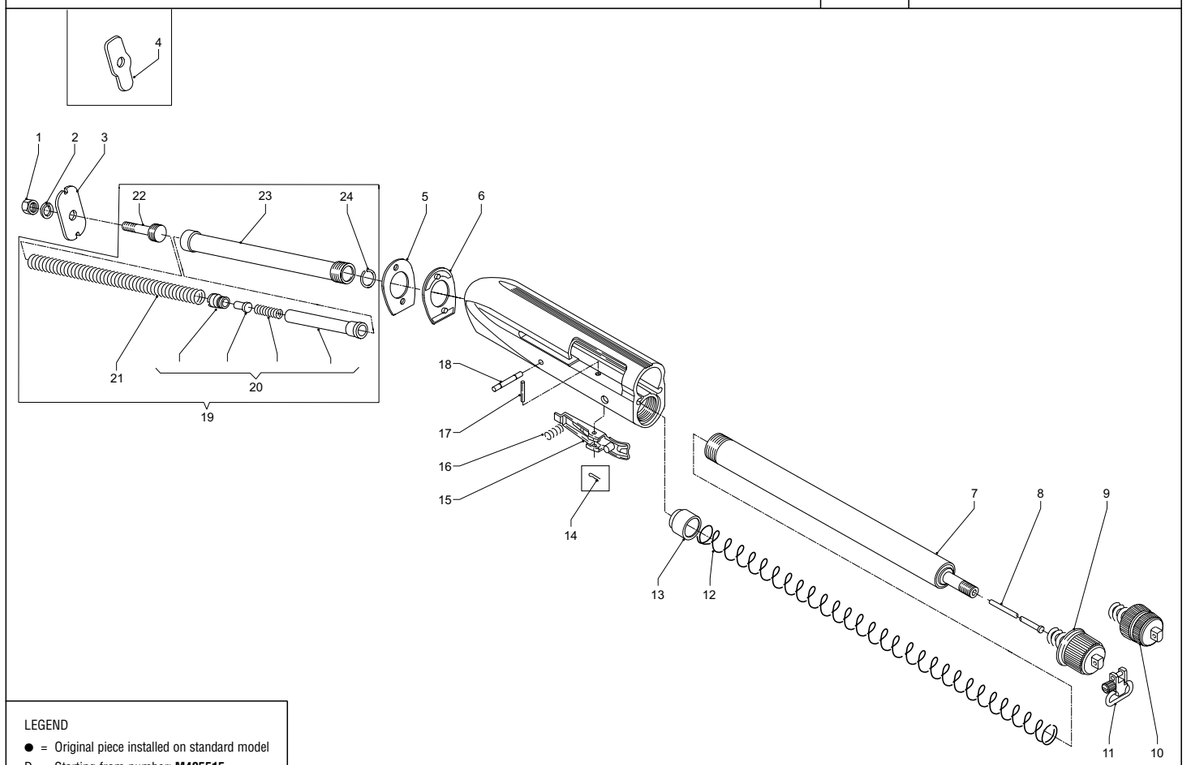

LEGEND
- ● = Original piece installed on standard model
- D = Starting from number: **M495515**
- G = Starting from number: **M760229-N125478**

01.08

No. Pos.	Código Manual	Código Proveedor	Descripción	P. Neto €	SUPER 90									MONTEFELTRO												
					Montefeltro O.T.	Super 90	Duca	Extra Leggero	Centro	Left Hand	Left Hand E	Montefeltro 20	Montefeltro 20 E	Montefeltro	Duca	Extra Leggero	Centro N.T.	Beccaccia	Beccaccia Supreme	Comfort	Montefeltro Left Hand	Duca Left Hand	Montefeltro 20	Duca 20	Beccaccia 20	aComfort 20
1	053A	90006000	Stock retaining nut		●	●	●	●	●	●	●	●	●	●	●	●	●	●	●	●	●	●	●	●	●	●
2	052A	90004800	Elastic washer		●	●	●	●	●	●	●	●	●	●	●	●	●	●	●	●	●	●	●	●	●	●
3	150W	G0187600	Stock locking plate, drop 45/60 R.H./L.H. (steel)											●	●	●	●	●	●	●	●	●	●	●	●	●
3	150W	G0187500	Stock locking plate, drop 50/55 R.H./L.H. (steel)											●	●	●	●	●	●	●	●	●	●	●	●	●
3	150W	G0240900	Stock locking plate, drop 64 R.H./L.H. (steel)											●	●	●	●	●	●	●	●	●	●	●	●	●
4	150B	G0097900	Stock locking plate, drop 45 (steel)						●																	
4	150B	G0026600	Stock locking plate, drop 50 (steel)		●																					
4	150B	G0026601	Stock locking plate, drop 50 (steel)			●	●	●	●			●	●													
4	150B	G0027000	Stock locking plate, drop 55 (steel)		●																					
4	150B	G0027001	Stock locking plate, drop 55 (steel)			●	●	●	●			●	●													
4	150B	G0027400	Stock locking plate, drop 60 (steel)		●																					
4	150B	G0027401	Stock locking plate, drop 60 (steel)			●	●	●	●			●	●													
4	150B	G0027801	Stock locking plate, drop 64 (steel)			●	●	●				●	●													
4	150E	G0026900	Stock locking plate, drop 50 L.H. (steel)							●	●															
4	150E	G0027300	Stock locking plate, drop 55 L.H. (steel)							●	●															
4	150E	G0027700	Stock locking plate, drop 60 L.H. (steel)							●	●															
4	150E	G0028100	Stock locking plate, drop 64 L.H. (steel)							●	●															
5	286D	G0234700	Stock change shim																				●	●	●	●
5	286G	G0204700	Stock change shim											●	●	●	●	●	●	●	●	●				
6	147D	G0234800	Drop change shim 45 (synthetic)																				●	●	●	●
6	147D	G0026801	Drop change shim 50 (synthetic)									●	●													
6	147D	G0234900	Drop change shim 50 (synthetic)																				●	●	●	●
6	147D	G0027201	Drop change shim 55 (synthetic)									●	●													
6	147D	G0235000	Drop change shim 55 (synthetic)																				●	●	●	●
6	147D	G0027601	Drop change shim 60 (synthetic)									●	●													
6	147D	G0235100	Drop change shim 60 (synthetic)																				●	●	●	●
6	147D	G0028001	Drop change shim 64 (synthetic)									●	●													
6	147D	G0235200	Drop change shim 64 (synthetic)																				●	●	●	●
6	147L	G0098400	Drop change shim 45 (synthetic)						●																	
6	147L	G0078600	Drop change shim 50 (synthetic)		●	●	●	●	●	●	●															
6	147L	G0078700	Drop change shim 55 (synthetic)		●	●	●	●	●	●	●															
6	147L	G0078800	Drop change shim 60 (synthetic)		●	●	●	●	●	●	●															

SUPER 90 - MONTEFELTRO

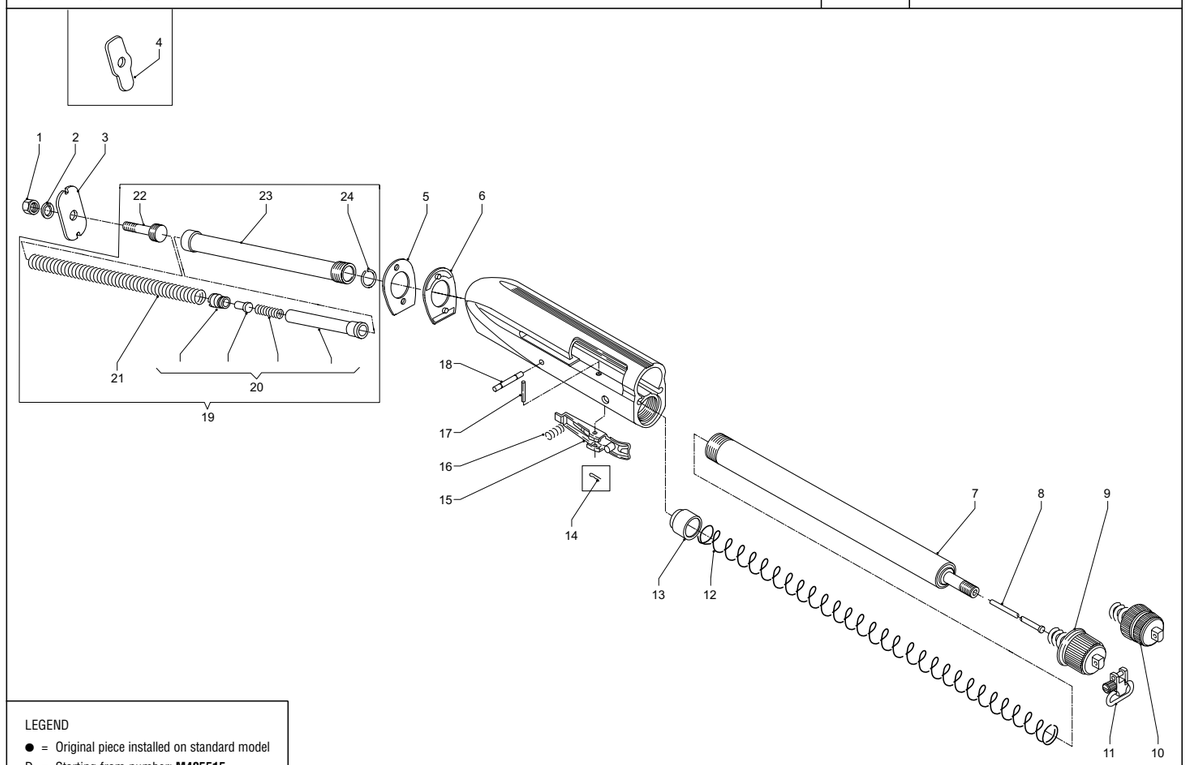

LEGEND
- ● = Original piece installed on standard model
- D = Starting from number: **M495515**
- G = Starting from number: **M760229-N125478**

01.10

No. Pos.	Código Manual	Código Proveedor	Descripción	P. Neto €	SUPER 90									MONTEFELTRO												
					Montefeltro O.T.	Super 90	Duca	Extra Leggero	Centro	Left Hand	Left Hand E	Montefeltro 20	Montefeltro 20 E	Montefeltro	Duca	Extra Leggero	Centro N.T.	Beccaccia	Beccaccia Supreme	Comfort	Montefeltro Left Hand	Duca Left Hand	Montefeltro 20	Duca 20	Beccaccia 20	Comfort 20
6	147L	G0078900	Drop change shim 64 (synthetic)		●	●	●	●		●	●															
6	147Y	G0204600	Drop change shim 45 (synthetic)											●	●	●	●	●	●	●	●	●				
6	147Y	G0136300	Drop change shim 50 (synthetic)											●	●	●	●	●	●	●	●	●				
6	147Y	G0136400	Drop change shim 55 (synthetic)											●	●	●	●	●	●	●	●	●				
6	147Y	G0136500	Drop change shim 60 (synthetic)											●	●	●	●	●	●	●	●	●				
6	147Y	G0136600	Drop change shim 64 (synthetic)											●	●	●	●	●	●	●	●	●				
7	066B	F0010002	Magazine tube			●	●	●	●	●	●			●	●	●	●			●	●	●				
7	066B	F0165300	Magazine tube															●	●							
7	066B	G0031700	Magazine tube		●																					
7	066B	F0084501	Three round limited magazine tube			●	●	●	●	●	●			●	●	●	●			●	●	●				
7	066D	F0010201	Magazine tube									●	●										●	●		●
7	066D	F0156600	Magazine tube																						●	
7	066D	F0153900	Three round limited magazine tube									●	●										●	●		
8	067A	G0062400	Two round limiter		●	●	●	●	●	●	●	●	●	●	●	●	●			●	●	●	●	●		
8	067A	G0016200	Three round limiter		●	●	●	●	●	●	●	●	●	●	●	●	●			●	●	●	●	●		
9	146L	F0038401	Fore-end follower (no swivel)		●	●	●	●	●	●	●	●	●	●	●	●	●	●		●	●	●	●	●	●	●
10	069B	F0005403	Fore-end follower (no swivel)		●	●	●	●		●	●	●	●													
10	069B	F0273500	Fore-end follower (no swivel)																●							
11	188L	F0038501	Removable sling swivel		●	●	●	●	●	●	●	●	●	●	●	●	●	●	●	●	●	●	●	●	●	●
12	064A	G0033401	Magazine spring		●	●	●	●	●	●	●							●	●							
12	064A	G0033402	Magazine spring											●	●	●	●			●	●	●				
12	064D	G0047601	Magazine spring																						●	
12	064D	G0047602	Magazine spring									●	●										●	●		●
13	065A	G0231201	Magazine follower		●	●	●	●	●	●	●			●	●	●	●	●	●	●	●	●				
13	065D	G0474700	Magazine follower									●	●										●	●	●	●
14	155E	G0034000	Carrier latch pin retaining spring							●	●										●	●				
15	057B	G0014301	Carrier latch		●	●	●	●	●	●	●	●	●	●	●	●	●	●	●	●	●	●	●	●	●	●
16	058J	G0126200	Carrier latch spring		●	●	●	●	●	●	●	●	●	●	●	●	●	●	●	●	●	●	●	●	●	●
17	056B	90002800	Carrier latch pin		●	●	●	●	●			●	●	●	●	●	●	●	●				●	●	●	●
17	156E	G0015401	Carrier latch pin							●	●										●	●				
18	015A	G0030701	Trigger guard pin, blued		●	●	●	●	●	●	●															
18	015A	G0216600	Trigger guard pin, blued											●	●	●	●	●	●	●	●	●				

SUPER 90 - MONTEFELTRO

SUPER 90 - MONTEFELTRO | DRWG. 3 | RECEIVER - MAGAZINE GROUP

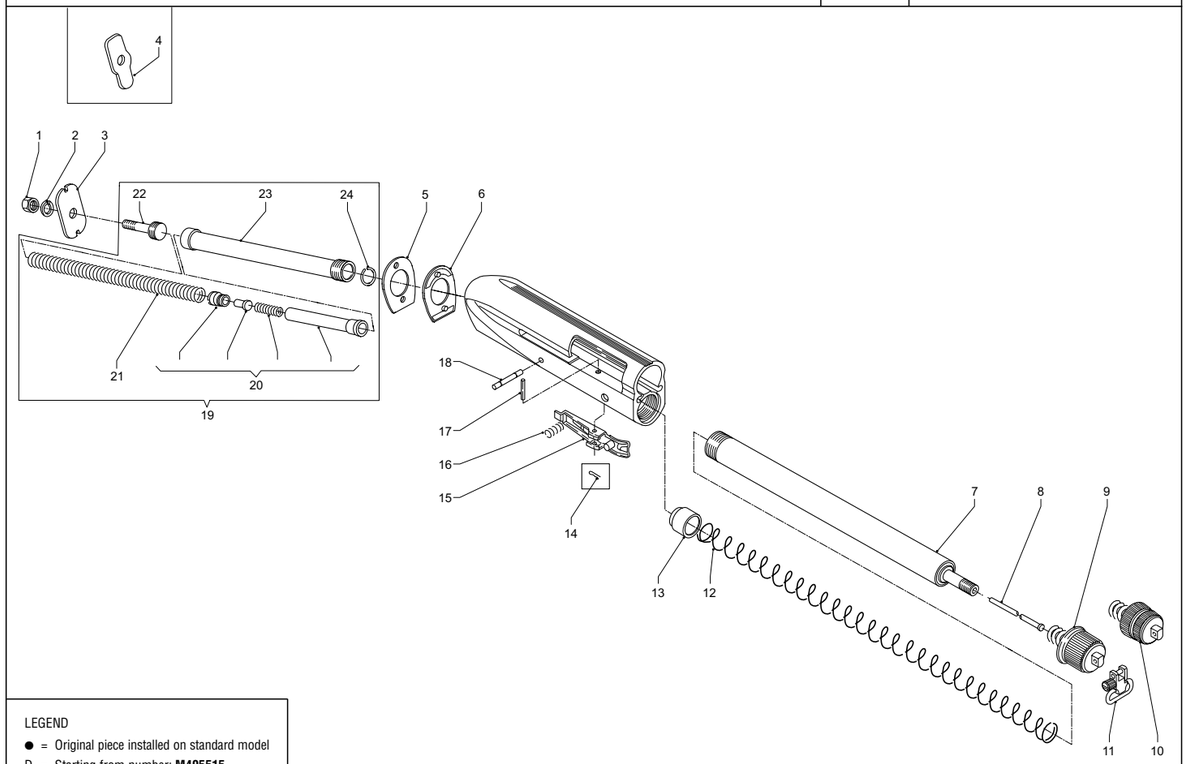

LEGEND
- ● = Original piece installed on standard model
- D = Starting from number: **M495515**
- G = Starting from number: **M760229-N125478**

01.12

No. Pos.	Código Manual	Código Proveedor	Descripción	P. Neto €	SUPER 90									MONTEFELTRO												
					Montefeltro O.T.	Super 90	Duca	Extra Leggero	Centro	Left Hand	Left Hand E	Montefeltro 20	Montefeltro 20 E	Montefeltro	Duca	Extra Leggero	Centro N.T.	Beccaccia	Beccaccia Supreme	Comfort	Montefeltro Left Hand	Duca Left Hand	Montefeltro 20	Duca 20	Beccaccia 20	Comfort 20
18	015D	G0030800	Trigger guard pin, blued									●	●													
18	015D	G0133701	Trigger guard pin, blued																				●	●	●	●
19	166D	F0123700	Recoil spring tube assembly									●	●										●	●	●	●
19	166D	F0123701	Recoil spring tube assembly (from reg. nr. M760229, N125478)									●G	●G										●G	●G	●G	●G
19	166L	F0118700	Recoil spring tube assembly						●								●									
19	166L	F0118701	Recoil spring tube assembly (from reg. nr. M760229, N125478)						●G								●G									
19	166Y	F0111700	Recoil spring tube assembly			●	●	●		●	●			●	●	●		●	●	●	●	●				
19	166Y	F0111701	Recoil spring tube assembly (from reg. nr. M760229, N125478)			●G	●G	●G		●G	●G			●G	●G	●G		●G	●G	●G	●G	●G				
20	190D	F0023901	Light load assembly									●	●													
20	190D	F0123600	Light load assembly																				●	●	●	●
20	190L	F0118600	Light load assembly						●								●									
20	190Y	F0111600	Light load assembly		●	●	●	●		●	●			●	●	●		●	●	●	●	●				
21	054B	G0218100	Recoil spring		●	●	●	●	●	●	●			●	●	●	●	●	●	●	●	●				
21	054D	G0047501	Recoil spring									●	●										●	●	●	●
22	050G	F0111300	Stock retaining nut screw		●	●	●	●	●	●	●	●	●	●	●	●	●	●	●	●	●	●	●	●	●	●
22	050G	F0111301	Stock retaining nut screw (from reg. nr. M760229, N125478)											●G	●G	●G	●G	●G	●G	●G	●G	●G	●G	●G	●G	●G
23	049B	G0017901	Recoil spring tube		●	●	●	●		●	●	●	●													
23	049D	F0084601	Recoil spring tube			●D	●D	●D	●D	●D	●D			●	●	●		●	●	●	●	●	●	●	●	●
23	049L	F0053200	Recoil spring tube						●								●									
24	183L	G0079800	Snap ring			●D	●D	●D	●D	●D	●D	●	●	●	●	●	●	●	●	●	●	●	●	●	●	●

SUPER 90 - MONTEFELTRO

SUPER 90 - MONTEFELTRO | DRWG. 4 | STOCK AND FORE-END GROUP

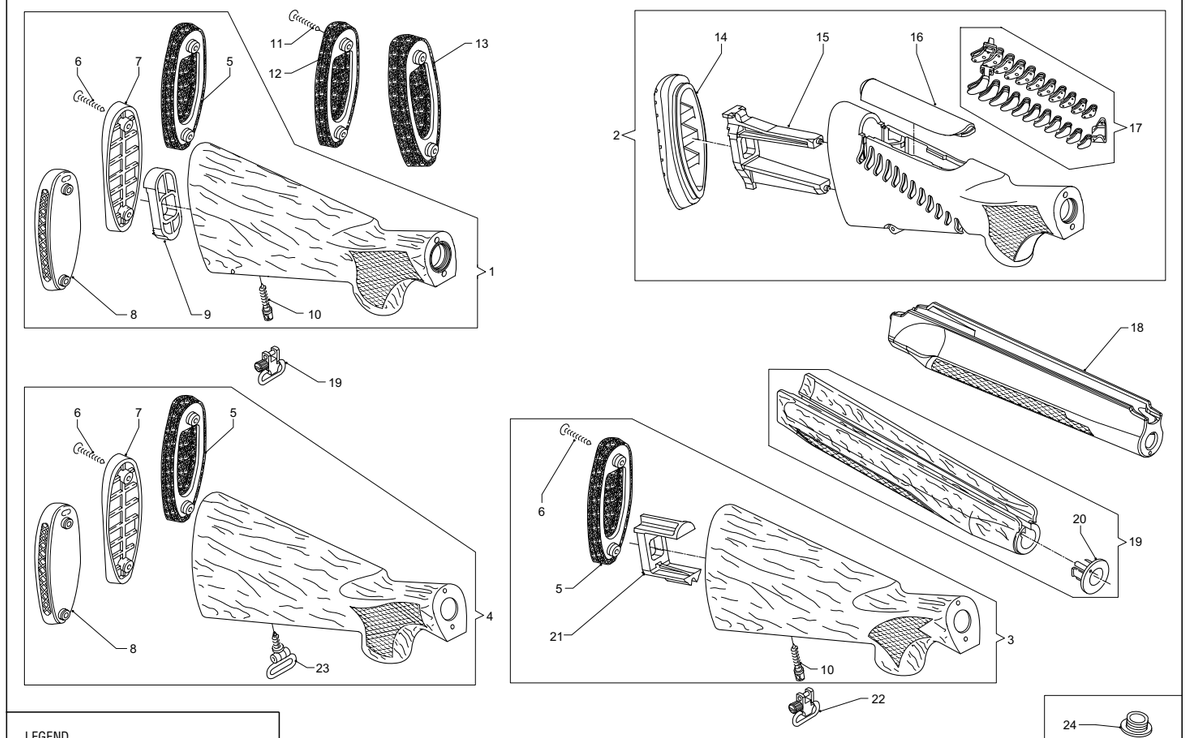

LEGEND
- ● = Original piece installed on standard model

01.14

No. Pos.	Código Manual	Código Proveedor	Descripción	P. Neto €	SUPER 90									MONTEFELTRO												
					Montefeltro O.T.	Super 90	Duca	Extra Leggero	Centro	Left Hand	Left Hand E	Montefeltro 20	Montefeltro 20 E	Montefeltro	Duca	Extra Leggero	Centro N.T.	Beccaccia	Beccaccia Supreme	Comfort	Montefeltro Left Hand	Duca Left Hand	Montefeltro 20	Duca 20	Beccaccia 20	Comfort 20
1	163D	F0135300	Wood stock GR1 VER (rubber butt plate) R.H./L.H.																				●			
1	163D	F0135400	Wood stock GR3 VER (rubber butt plate) R.H./L.H.																					●		
1	177G	F0135800	Wood stock GR1 VER (synthetic butt plate) R.H./L.H.											●							●					
1	177G	F0151600	Wood stock GR1 VER (synthetic butt plate) R.H./L.H													●										
1	381D	F0156700	Wood stock GR0 (rubber butt plate) R.H./L.H. "Elegant System"																						●	
1	381D	F0285500	Wood stock GR0 (without butt plate) R.H./L.H. "Elegant System"																							●
1	381Y	F0126400	Wood stock GR0 (synthetic butt plate) R.H./L.H. "Elegant System"															●								
1	381Y	F0317800	Wood stock GR0 (without butt plate) R.H./L.H. "Elegant System"																●							
1	381Y	F0152200	Wood stock GR3 VER (synthetic butt plate) R.H./L.H.												●							●				
2	388B	F0165800	Stock Comfort																	●						
2	415U	F0285600	Stock Comfort with butt plate R.H.																							●
3	383L	F0119000	Wood stock GR2 VER (rubber butt plate) R.H./L.H.														●									
4	162B	F0014900	Wood stock GR1 VER (synthetic butt plate) R.H.		●	●																				
4	162B	F0015001	Wood stock GR1 VER (synthetic butt plate) R.H.					●																		
4	162B	F0015600	Wood stock GR3 VER (synthetic butt plate) R.H.				●																			
4	162E	F0015500	Wood stock GR1 VER (synthetic butt plate) L.H.							●																
4	162E	F0015900	Wood stock GR3 VER (synthetic butt plate) L.H.								●															
4	163D	F0015401	Wood stock GR1 VER (rubber butt plate) R.H.									●														
4	163D	F0033600	Wood stock GR1 VER (rubber butt plate) L.H.									●														
4	163D	F0015801	Wood stock GR3 VER (rubber butt plate) R.H.										●													
4	163D	F0062600	Wood stock GR3 VER (rubber butt plate) L.H.										●													
4	163L	F0036500	Wood stock GR2 VER (rubber butt plate) R.H.						●																	
4	163L	F0047200	Wood stock GR2 VER (rubber butt plate) L.H.						●																	
4	381D	F0135300	Wood stock GR1 VER (rubber butt plate) R.H./L.H.																							●
5	151L	L0020800	Rubber butt plate						●			●	●				●						●	●	●	
6	062L	90007600	Butt plate screw		●	●	●	●	●	●	●	●	●	●	●	●	●	●		●	●	●	●	●	●	
7	061A	L0010901	Synthetic butt plate		●	●	●	●		●	●			●	●	●		●			●	●				
8	151C	G0297300	Rubber butt plate double ventilated			●	●	●		●	●	●	●	●	●	●					●	●				
9	149Y	G0204801	Stock spacer											●	●	●		●	●		●	●	●	●	●	●
10	152C	G0028800	Removable sling swivel screw						●					●	●	●	●	●	●		●	●	●	●	●	●
11	062L	G0098701	Butt plate screw																●							
12	K151	G0480700	Rubber butt plate, 10 mm.																●							
13		G0573200	Polyurethane recoil pad, medium 20 mm.																●							●

SUPER 90 - MONTEFELTRO

SUPER 90 - MONTEFELTRO | DRWG. 4 | STOCK AND FORE-END GROUP

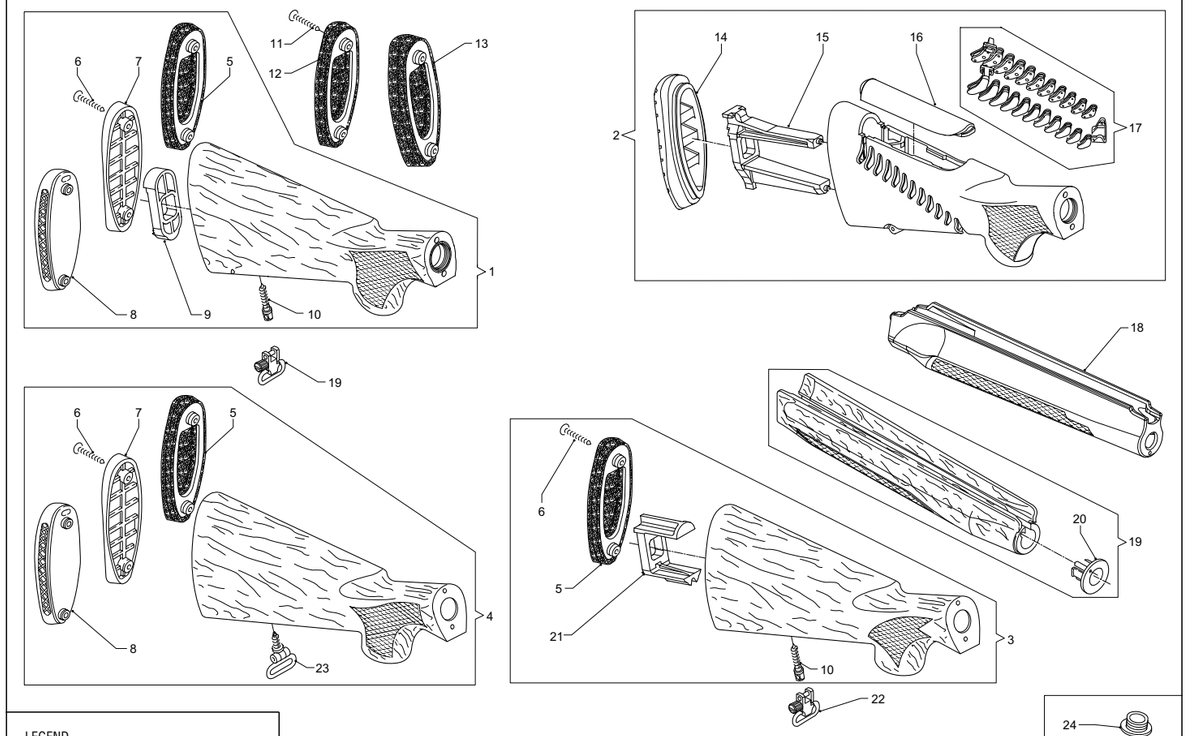

LEGEND
● = Original piece installed on standard model

No. Pos.	Código Manual	Código Proveedor	Descripción	P. Neto €	SUPER 90									MONTEFELTRO												
					Montefeltro O.T.	Super 90	Duca	Extra Leggero	Centro	Left Hand	Left Hand E	Montefeltro 20	Montefeltro 20 E	Montefeltro	Duca	Extra Leggero	Centro N.T.	Beccaccia	Beccaccia Supreme	Comfort	Montefeltro Left Hand	Duca Left Hand	Montefeltro 20	Duca 20	Beccaccia 20	Comfort 20
14	151G	G0216401	Gel recoil pad, medium R.H. 25 mm.																							●
15	149C	G0215500	Comfort spacer																	●						●
16	380G	G0256100	Gel comb, high R.H.																	●						●
16	380G	G0295700	Gel comb, high L.H.																	●						●
16	380G	G0215700	Gel comb, low R.H.																	●						●
16	380G	G0233100	Gel comb, medium R.H.																	●						●
17	379G	F0108700	Comfort chevrons assembly																	●						●
18	169D	F0321700	Fore-end, synthetic Soft Touch																							●
18	390B	F0130101	Fore-end, synthetic Soft Touch																	●						
19	070D	F0317900	Wood fore-end, GR0 short "Elegant System"																●							
19	070D	F0013901	Wood fore-end, GR1 VER										●													
19	070D	F0133200	Wood fore-end, GR1 VER									●											●			
19	070D	F0132600	Wood fore-end, GR3 VER																					●		
19	070Y	F0127400	Wood fore-end, GR0 long "Elegant System"															●								
19	070Y	F0086701	Wood fore-end, GR1 VER		●	●		●		●				●		●					●					
19	070Y	F0118900	Wood fore-end, GR2 VER						●								●									
19	070Y	F0086901	Wood fore-end, GR3 VER				●				●															
19	070Y	F0115801	Wood fore-end, GR3 VER												●							●				
19	422B	F0126300	Wood fore-end, GR0 short "Elegant System"															●								
19	422D	F0156800	Wood fore-end, GR0 short "Elegant System"																						●	
20	167L	F0037800	Cap retaining pin bushing assembly		●	●	●	●	●	●	●	●	●	●	●	●	●	●	●		●	●	●	●	●	
21	149L	G0224800	Stock spacer, Centro														●									
22	188L	F0038501	Removable sling swivel						●					●	●	●	●	●	●	●	●	●	●	●	●	●
23	063A	F0017100	Stock swivel		●	●	●	●		●	●	●	●													
24	149L	G0230400	Shield support															●	●						●	
24	194L	G0093500	Shield support					●	●							●	●									
25	193L	G0230500	Beccaccia shield															●							●	
25	193L	G0028400	E.L. shield					●								●										
25	193L	G0571400	Beccaccia Supreme oval shield																●							
–	–	F0046700	Butt plate kit assembly, 370 mm.						●					●	●	●	●									
–	–	F0053100	Butt plate kit assembly, 370 mm. 20-gauge									●	●										●	●	●	●
–	–	F0139600	Gel recoil pad															●								
–	–	G0240000	False extension															●								

SUPER 90 - MONTEFELTRO

SUPER 90 - MONTEFELTRO | DRWG. 5 | BARREL GROUP

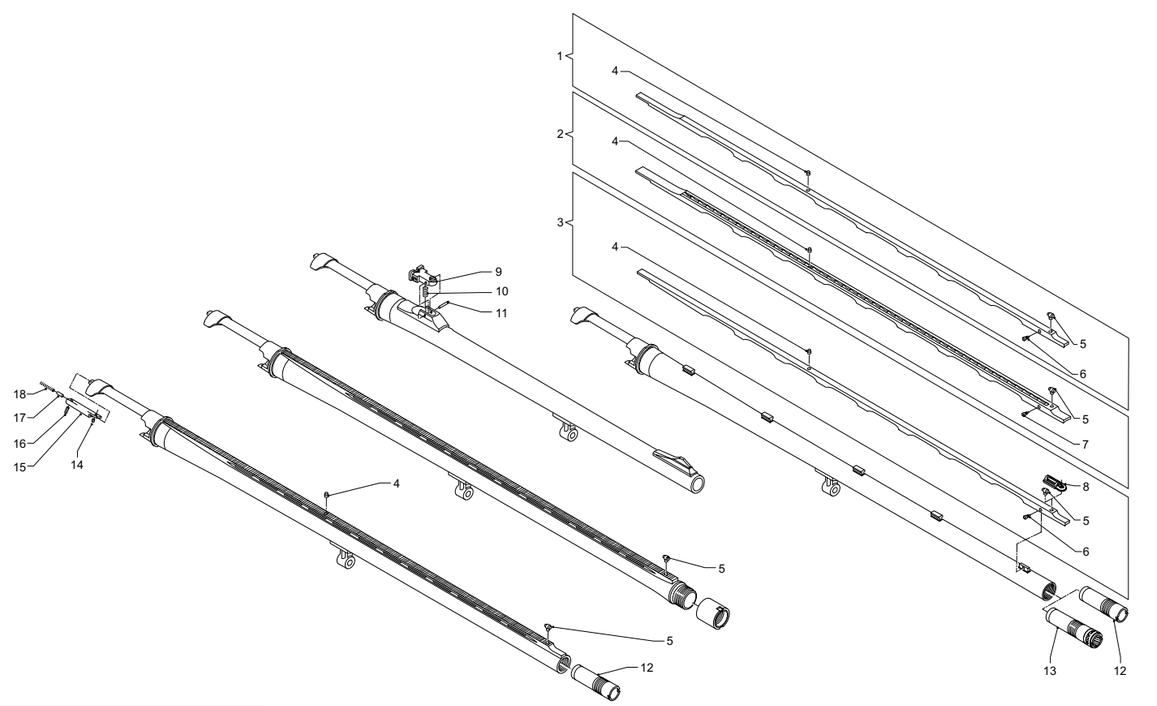

LEGEND
● = Original piece installed on standard model

No. Pos.	Código Manual	Código Proveedor	Descripción	P. Neto €	SUPER 90									MONTEFELTRO												
					Montefeltro O.T.	Super 90	Duca	Extra Leggero	Centro	Left Hand	Left Hand E	Montefeltro 20	Montefeltro 20 E	Montefeltro	Duca	Extra Leggero	Centro N.T.	Beccaccia	Beccaccia Supreme	Comfort	Montefeltro Left Hand	Duca Left Hand	Montefeltro 20	Duca 20	Beccaccia 20	Comfort 20
1	199L	–	Hunting high rib barrel assembly (see accessories)																							
2	200L	–	Shooting rib barrel assembly (see accessories)																							
3	201L	–	Hunting low rib barrel assembly (see accessories)																							
4	153A	G002150	Intermediate sight							●		●	●				●	●	●				●	●	●	
5	044B	G002090	Fluorescent front sight		●	●	●	●	●	●	●	●	●	●	●	●	●	●		●	●	●	●	●	●	●
6	184L	G007920	Hunting rib fixing screw						●								●	●	●						●	
7	185L	G007930	Shooting rib fixing screw						●								●									
8	044Y	F031800	Yellow front sight, long																●							
9	127N	F002700	Rear sight for Slug barrel - adjustable rear sight		●	●	●	●		●	●			●	●	●				●	●	●				
9	–	F0013200	Rear sight for Slug barrel - scope mount		●	●	●	●						●	●	●				●						
10	259N	G0063700	Rear sight spring		●	●	●	●		●	●			●	●	●				●	●	●				
11	035A	90003100	Rear sight fixing pin		●	●	●	●		●	●			●	●	●				●	●	●				
11	035D	90003200	Spring pin		●	●	●	●		●	●			●	●	●				●	●	●				
12	213D	–	Internal choke 20-gauge																				●	●	●	●
12	213G	–	Internal choke											●	●	●	●	●	●	●	●	●				
13	481B	F0318200	Ampliator choke		●	●	●	●	●	●	●			●	●	●	●	●	●	●	●	●				
14	172D	G0135600	Front ejector retaining rivet									●	●													
14	172J	G0128000	Front ejector retaining rivet		●	●	●	●	●	●	●			●	●	●	●	●	●	●	●	●				
15	168J	G0092700	Ejector frame Magnum		●	●	●	●	●	●	●	●	●	●	●	●	●	●	●	●	●	●	●	●	●	●
16	047D	G0176000	Rear ejector retaining rivet									●	●										●	●	●	●
16	047J	G0130800	Rear ejector retaining rivet		●	●	●	●	●	●	●			●	●	●	●	●	●	●	●	●				
17	045J	G0089101	Ejector pin		●	●	●	●	●	●	●	●	●	●	●	●	●	●	●	●	●	●	●	●	●	●
18	046J	G0128100	Ejector pin spring		●	●	●	●	●	●	●	●	●	●	●	●	●	●	●	●	●	●	●	●	●	●
–	–	90001200	Internal choke barrel O-Ring		●	●	●	●		●	●			●	●	●				●	●	●				
–	–	G0020800	Threaded locking ring		●	●	●	●		●	●			●	●	●				●	●	●				

SUPER 90 - MONTEFELTRO

02

RAFFAELLO (OLD TYPE)

BLACK EAGLE
121
123
SPECIAL
SPECIAL LUSSO
LIMITED EDITIONS (OLD TYPE)
EXECUTIVE
SPECIAL 20
LIMITED EDITIONS 20 (OLD TYPE)

RAFFAELLO (NEW TYPE)

RAFFAELLO
ELEGANT
CRIOCOMFORT
CRIO
CRIO EVO
DE LUXE
LIMITED EDITIONS (NEW TYPE)
20 SLUG
CRIO 20
LIMITED EDITIONS 20 (NEW TYPE)
CRIO 28
LEFT HAND
LORD 20

RAFFAELLO | **DRWG. 1** | **TRIGGER GUARD GROUP**

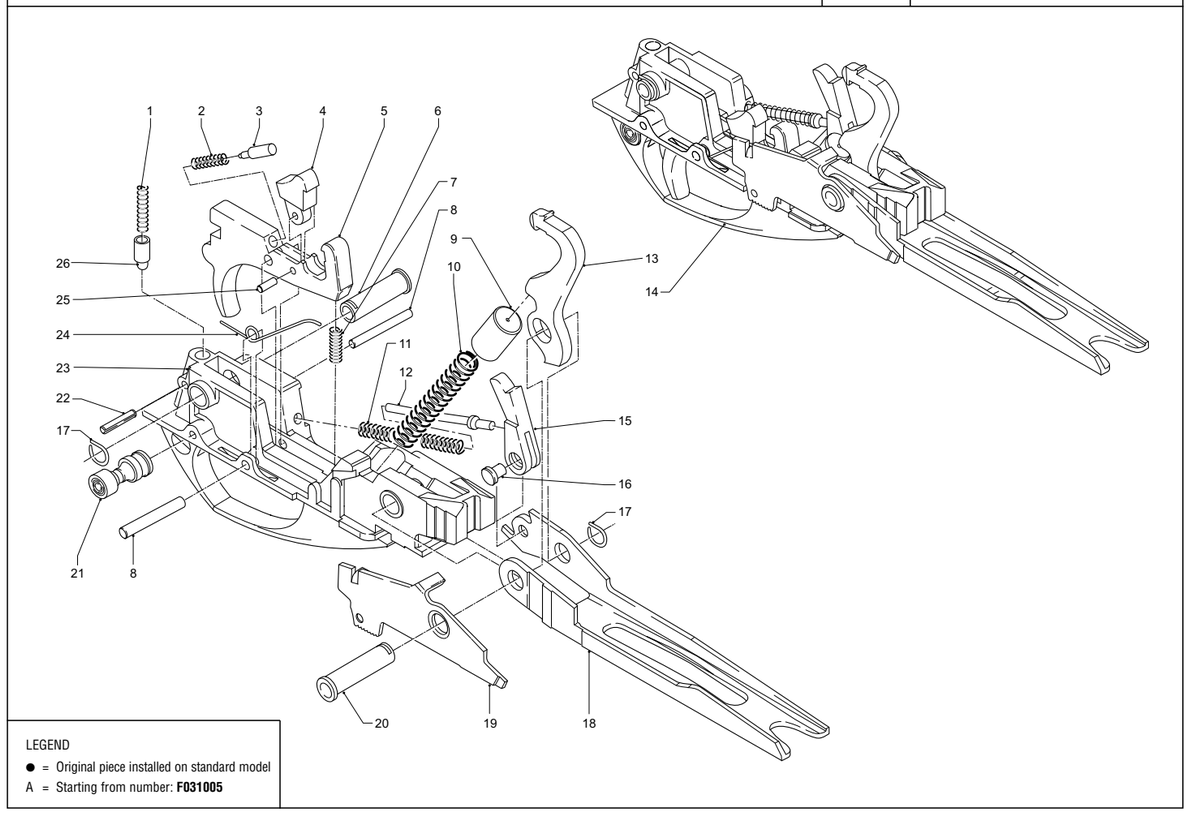

LEGEND
● = Original piece installed on standard model
A = Starting from number: **F031005**

02.02

02.01

No. Pos.	Código Manual	Código Proveedor	Descripción	P. Neto €	RAFFAELLO O.T.									RAFFAELLO N.T.												
					Black Eagle	121	123	Special	Special Lusso	Limited Editions O.T.	Executive	Special 20	Limited Editions 20 O.T.	Raffaello	Elegant	Criocomfort	Crio	Crio Evo	De Luxe	Limited Editions N.T.	20 Slug	Crio 20	Limited Editions 20 N.T.	Crio 28	Left Hand	Lord 20
1	007A	G0032001	Safety plunger spring		●	●	●	●	●	●	●	●	●	●	●	●	●	●	●	●	●	●	●	●	●	●
2	277J	G0128500	Disconnector spring		●	●	●	●	●	●	●	●	●	●	●	●	●	●	●	●	●	●	●	●	●	●
3	045J	G0089101	Disconnector pin		●	●	●	●	●	●	●	●	●	●	●	●	●	●	●	●	●	●	●	●	●	●
4	005B	G0001200	Disconnector hammer																							●
4	005B	G0001300	Disconnector hammer		●	●	●	●	●	●	●	●	●	●	●	●	●	●	●	●	●	●	●	●	●	
5	009B	G0002303	Trigger (blued)																							●
5	009B	G0002403	Trigger (chrome-plated)		●	●	●	●A	●A		●A	●	●			●	●		●		●	●		●	●	
5	009B	G0476400	Trigger (carbon colour)															●								
5	009B	G0002603	Trigger (gold-plated)		●A	●A	●A				●A		●	●	●	●			●	●			●			
6	016J	G0089900	Trigger pin bush		●	●	●	●	●	●	●			●	●	●	●	●	●	●	●	●	●	●	●	●
7	011J	G0124000	Trigger spring		●	●	●	●	●	●	●	●	●	●	●	●	●	●	●	●	●	●	●	●	●	●
8	010L	90008800	Trigger pin											●	●	●	●	●	●	●	●	●	●	●	●	●
9	003A	G0000101	Hammer spring cap		●	●	●	●	●	●	●	●	●	●	●	●	●	●	●	●	●	●	●	●	●	●
10	004A	G0218200	Hammer spring		●	●	●	●	●	●	●	●	●	●	●	●	●	●	●	●	●	●	●	●	●	●
11	021A	G0032100	Carrier spring									●	●								●	●	●		●	●
11	021J	G0124200	Carrier spring		●	●	●	●	●	●	●			●	●	●	●	●	●	●						
12	022A	G0004301	Bolt latch pin		●	●	●	●	●	●	●	●	●	●	●	●	●	●	●	●	●	●	●	●	●	●
13	002B	G0001000	Hammer		●A	●A	●A	●A	●A	●	●A	●	●	●	●	●	●	●	●	●	●	●	●	●	●	●
14	001H	F0001500	Trigger group assembly, chrome-plated		●	●	●	●	●		●															
14	001H	F0001900	Trigger group assembly, gold-plated							●	●															
14	001K	F0291200	Trigger group assembly, blued																							●
14	001K	F0054700	Trigger group assembly, chrome-plated									●														
14	001K	F0136300	Trigger group assembly, chrome-plated																		●	●				
14	001K	F0054800	Trigger group assembly, gold-plated										●													
14	001K	F0123500	Trigger group assembly, gold-plated																				●			
14	001Y	F0064601	Trigger group assembly, chrome-plated													●	●		●							
14	001Y	F0254000	Trigger group assembly, chrome-plated															●								
14	001Y	F0084300	Trigger group assembly, gold-plated											●	●					●						
14	K001	F0264900	Trigger group assembly, chrome-plated																					●		
14	Y001	F0292900	Trigger group assembly, chrome-plated																						●	
15	019A	G0001400	Bolt stop tooth		●	●	●	●	●	●	●			●	●	●	●	●	●	●					●	
15	019D	G0224900	Bolt stop tooth									●	●								●	●	●	●		●

RAFFAELLO | DRWG. 1 | TRIGGER GUARD GROUP

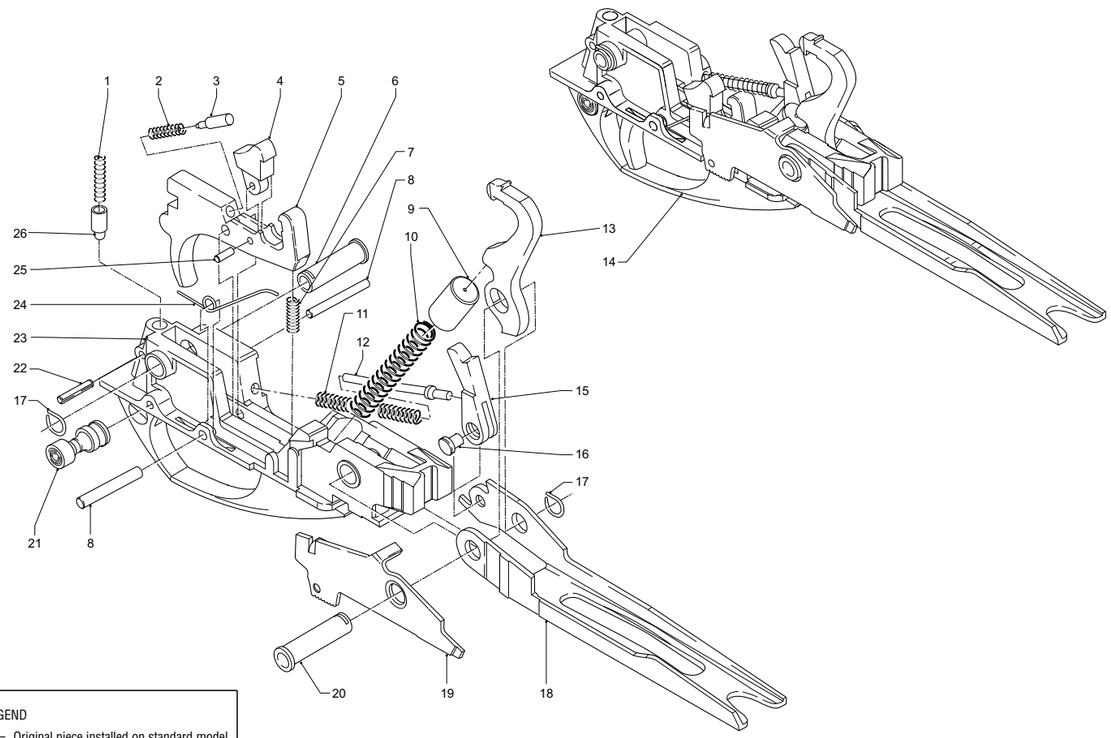

LEGEND
● = Original piece installed on standard model
A = Starting from number: **F031005**

02.04

No. Pos.	Código Manual	Código Proveedor	Descripción	P. Neto €	RAFFAELLO O.T.									RAFFAELLO N.T.													
					Black Eagle	121	123	Special	Special Lusso	Limited Editions O.T.	Executive	Special 20	Limited Editions 20 O.T.	Raffaello	Elegant	Criocomfort	Crio	Crio Evo	De Luxe	Limited Editions N.T.	20 Slug	Crio 20	Limited Editions 20 N.T.	Crio 28	Left Hand	Lord 20
16	020A	G0003900	Bolt stop tooth pin		●	●	●	●	●	●	●	●	●	●	●	●	●	●	●	●	●	●	●	●	●	●	●
17	018A	G0032300	Trigger guard pin spring		●	●	●	●	●	●	●	●	●	●	●	●	●	●	●	●	●	●	●	●	●	●	●
18	017D	G0106100	Carrier									●	●								●	●	●				●
18	017E	G0001900	Carrier																							●	
18	017L	G0076200	Carrier		●	●	●	●	●	●	●			●	●	●	●		●	●							
18	017L	G0476301	Carrier															●									
18	K017	G0481801	Carrier																						●		
19	076D	G0003600	Cartridge drop lever									●	●								●	●	●	●			
19	076D	G0106000	Cartridge drop lever																								●
19	076L	G0076600	Cartridge drop lever		●	●	●	●	●	●	●			●	●	●	●		●	●						●	
19	076L	G0476201	Cartridge drop lever															●									
20	097H	G0004400	Carrier pin		●	●	●	●	●	●	●			●	●	●	●	●	●	●						●	
20	097K	G0117000	Carrier pin									●	●								●	●	●	●			●
21	013C	G0000300	Hand safety button		●	●	●	●	●	●	●	●	●	●	●	●	●	●	●	●	●	●	●	●	●	●	●
22	012A	90003200	Safety spring retaining pin		●	●	●	●	●	●	●	●	●	●	●	●	●	●	●	●	●	●	●	●	●	●	●
23	014H	G0002902	Trigger guard		●	●	●	●	●	●	●																
23	014K	G0116900	Trigger guard									●	●														
23	014K	G0235400	Trigger guard																		●	●	●				●
23	014Y	G0136200	Trigger guard											●	●	●	●		●	●						●	
23	014Y	G0476101	Trigger guard															●									
23	K014	G0481900	Trigger guard, anod. mat black Raff. 28																						●		
24	077B	G0032800	Cartridge drop lever spring		●	●	●	●	●	●	●	●	●	●	●	●	●	●	●	●	●	●	●	●	●	●	●
25	023A	G0004001	Disconnector pin		●	●	●	●	●	●	●	●	●	●	●	●	●	●	●	●	●	●	●	●	●	●	●
26	008A	G0054200	Hand safety plunger		●	●	●	●	●	●	●	●	●	●	●	●	●	●	●	●	●	●	●	●	●	●	●

RAFFAELLO

RAFFAELLO | DRWG. 2 | BOLT GROUP

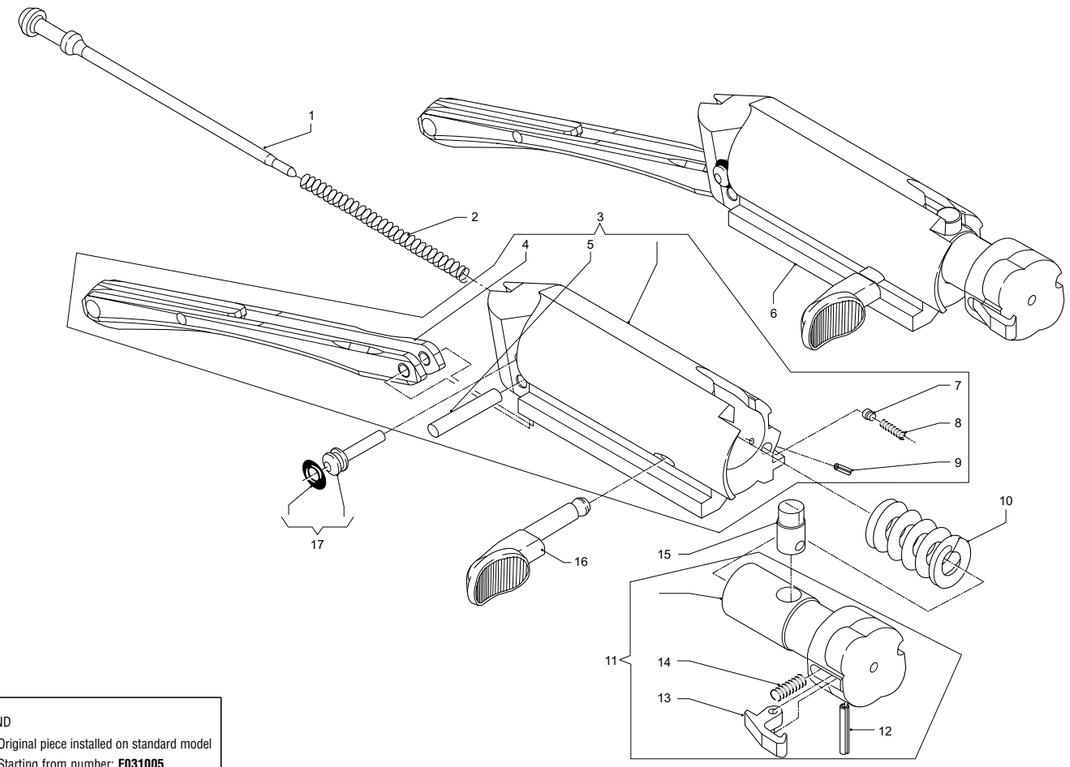

LEGEND
● = Original piece installed on standard model
A = Starting from number: **F031005**

02.06

No. Pos.	Código Manual	Código Proveedor	Descripción	P. Neto €	RAFFAELLO O.T.									RAFFAELLO N.T.													
					Black Eagle	121	123	Special	Special Lusso	Limited Editions O.T.	Executive	Special 20	Limited Editions 20 O.T.	Raffaello	Elegant	Criocomfort	Crio	Crio Evo	De Luxe	Limited Editions N.T.	20 Slug	Crio 20	Limited Editions 20 N.T.	Crio 28	Left Hand	Lord 20
1	025B	G0007300	Firing pin		●	●	●	●	●		●																
1	025B	G0007301	Firing pin		●A	●A	●A	●A	●A	●	●A	●	●	●	●	●	●	●	●	●	●	●	●	●	●	●	●
2	037A	G0033101	Firing pin spring		●	●	●	●	●	●	●	●	●	●	●	●	●	●	●	●	●	●	●	●	●	●	●
3	026D	F0297500	Bolt assembly, partial (blued)																								●
3	026D	F0026700	Bolt, partial									●	●								●	●	●	●			
3	026E	F0004100	Bolt, partial																						●		
3	026H	F0004000	Bolt, partial		●	●	●	●	●	●	●			●	●	●	●		●	●							
3	026H	F0254200	Bolt, partial															●									
4	027L	G0079100	Link		●	●	●	●	●	●	●	●	●	●	●	●	●	●	●	●	●	●	●	●	●	●	●
5	029D	G0257700	Link pin									●	●								●	●	●	●			●
5	029J	G0091400	Link pin		●	●	●	●	●	●	●			●	●	●	●	●	●	●					●		
6	024D	F0003200	Bolt group									●	●								●	●	●				
6	024D	F0297600	Bolt group																								●
6	024E	F0003000	Bolt group																						●		
6	024H	F0002901	Bolt group		●	●	●	●	●	●	●			●	●	●	●		●	●							
6	024H	F0254300	Bolt group															●									
6	K024	F0264500	Bolt group																					●			
7	039A	G0007500	Bolt handle pin		●	●	●	●	●	●	●	●	●	●	●	●	●	●	●	●	●	●	●	●	●	●	●
8	038J	G0126800	Bolt handle retaining spring		●	●	●	●	●	●	●	●	●	●	●	●	●	●	●	●	●	●	●	●	●	●	●
9	040A	90021600	Bolt handle spring retaining pin		●	●	●	●	●	●	●	●	●	●	●	●	●	●	●	●	●	●	●	●	●	●	●
10	036A	G0032901	Inertia spring		●	●	●	●	●	●	●			●	●	●	●	●	●	●					●		
10	036D	G0033301	Inertia spring									●									●	●	●	●			●
11	165A	F0004601	Locking head assembly		●	●	●	●	●	●	●			●	●	●	●	●	●	●							
11	165D	F0004900	Locking head assembly									●	●								●	●	●				●
11	165E	F0004701	Locking head assembly																						●		
11	K165	F0264401	Locking head assembly																					●			
12	006P	90003200	Extractor pin									●	●								●	●	●	●			●
12	035A	90003100	Extractor pin		●	●	●	●	●	●	●			●	●	●	●	●	●	●					●		
13	034A	G0004901	Extractor		●	●	●	●	●	●	●	●	●	●	●	●	●	●	●	●	●	●	●	●			●
13	034E	G0005000	Extractor																						●		
14	033J	G0126900	Extractor spring		●	●	●	●	●	●	●	●	●	●	●	●	●	●	●	●	●	●	●		●	●	●
14	K033	G0530301	Extractor spring																					●			

RAFFAELLO

RAFFAELLO | DRWG. 2 | BOLT GROUP

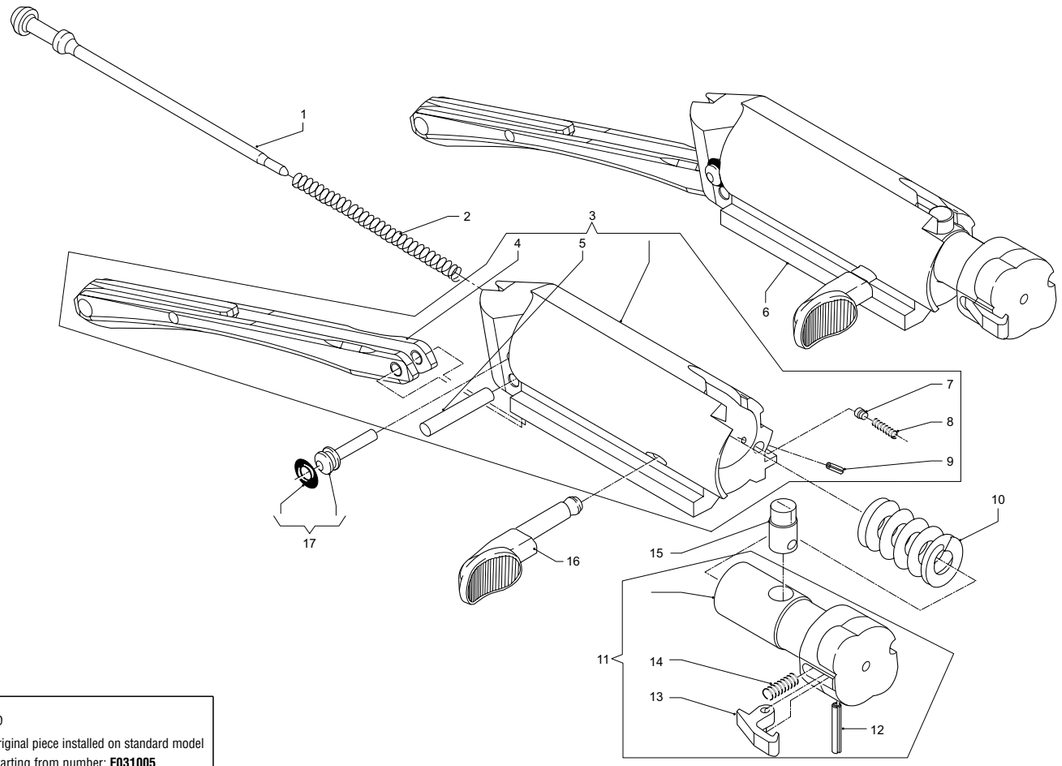

LEGEND
● = Original piece installed on standard model
A = Starting from number: **F031005**

02.08

No. Pos.	Código Manual	Código Proveedor	Descripción	P. Neto €	RAFFAELLO O.T.									RAFFAELLO N.T.												
					Black Eagle	121	123	Special	Special Lusso	Limited Editions O.T.	Executive	Special 20	Limited Editions 20 O.T.	Raffaello	Elegant	Criocomfort	Crio	Crio Evo	De Luxe	Limited Editions N.T.	20 Slug	Crio 20	Limited Editions 20 N.T.	Crio 28	Left Hand	Lord 20
15	031B	G0007900	Locking head pin		●	●	●	●	●	●	●			●	●	●	●	●	●	●						
15	031D	G0008100	Locking head pin									●	●								●	●	●	●		●
15	031E	G0007800	Locking head pin																						●	
16	030D	G0005701	Bolt handle									●	●								●	●	●	●		
16	030H	G0005501	Bolt handle		●	●	●	●	●	●	●			●	●	●	●		●	●					●	
16	030H	G0476600	Bolt handle															●								
16	030H	G0541700	Bolt handle																							●
17	028A	F0004501	Firing pin retaining pin		●	●	●	●	●	●	●	●	●	●	●	●	●	●	●	●	●	●	●	●	●	●

RAFFAELLO

RAFFAELLO | DRWG. 3 | RECEIVER - MAGAZINE GROUP

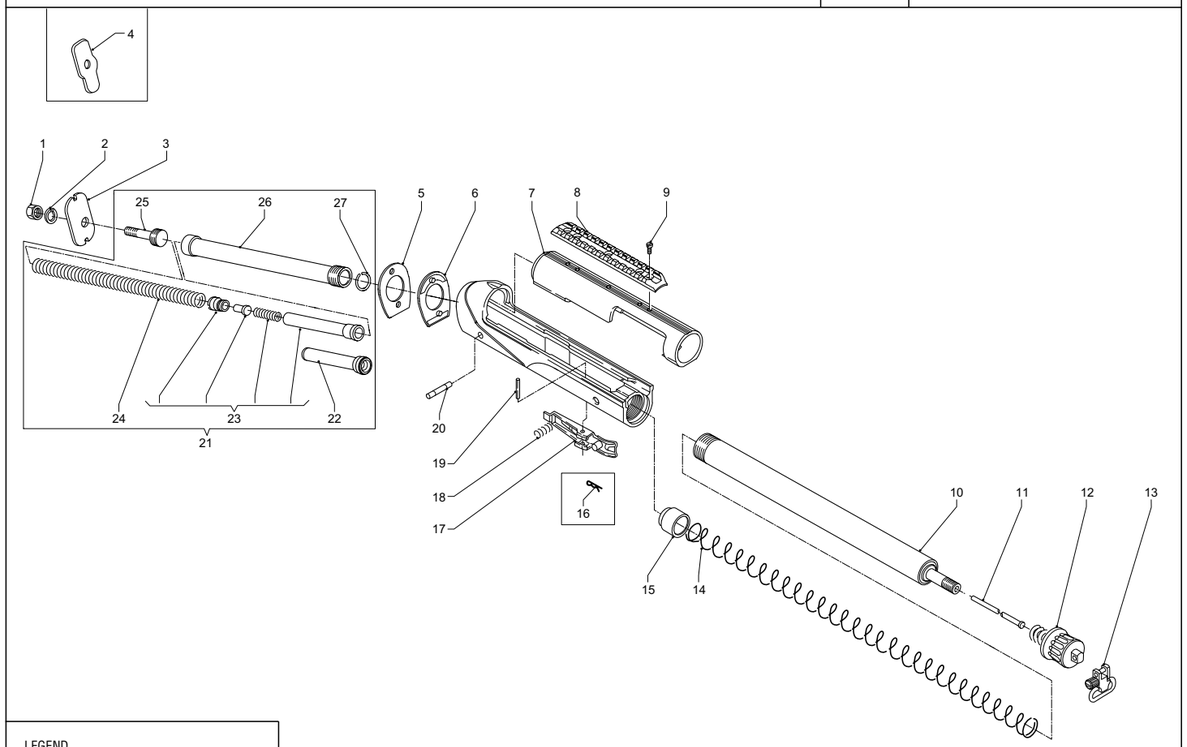

LEGEND
● = Original piece installed on standard model
A = Starting from number: **F031005**

02.10

No. Pos.	Código Manual	Código Proveedor	Descripción	P. Neto €	RAFFAELLO O.T.									RAFFAELLO N.T.												
					Black Eagle	121	123	Special	Special Lusso	Limited Editions O.T.	Executive	Special 20	Limited Editions 20 O.T.	Raffaello	Elegant	Criocomfort	Crio	Crio Evo	De Luxe	Limited Editions N.T.	20 Slug	Crio 20	Limited Editions 20 N.T.	Crio 28	Left Hand	Lord 20
1	053A	90006000	Stock retaining nut		●	●	●	●	●	●	●	●	●	●	●	●	●	●	●	●	●	●	●	●	●	●
2	052A	90004800	Elastic washer		●	●	●	●	●	●	●	●	●	●	●	●	●	●	●	●	●	●	●	●	●	●
3	150W	G0187600	Stock locking plate, drop 45/60 R.H./L.H. (steel)											●	●	●	●	●	●	●	●	●	●	●	●	●
3	150W	G0187500	Stock locking plate, drop 50/55 R.H./L.H. (steel)											●	●	●	●	●	●	●	●	●	●	●	●	●
3	150W	G0240901	Stock locking plate, drop 64 R.H./L.H. (steel)											●	●		●	●	●	●	●	●	●	●	●	●
4	150B	G0026601	Stock locking plate, drop 50 (steel)		●	●	●	●	●	●	●	●	●													
4	150B	G0027001	Stock locking plate, drop 55 (steel)		●	●	●	●	●	●	●	●	●													
4	150B	G0027401	Stock locking plate, drop 60 (steel)		●	●	●	●	●	●	●	●	●													
4	150B	G0027801	Stock locking plate, drop 64 (steel)		●	●	●	●	●	●	●	●	●													
4	150E	G0026900	Stock locking plate, drop 50 L.H. (steel)		●	●	●	●	●	●	●	●	●													
4	150E	G0027300	Stock locking plate, drop 55 L.H. (steel)		●	●	●	●	●	●	●	●	●													
4	150E	G0027700	Stock locking plate, drop 60 L.H. (steel)		●	●	●	●	●	●	●	●	●													
4	150E	G0028100	Stock locking plate, drop 64 L.H. (steel)		●	●	●	●	●	●	●	●	●													
5	286D	G0234700	Cast change shim																		●	●	●	●		●
5	286G	G0204700	Cast change shim											●	●	●	●	●	●	●					●	
6	147D	G0234800	Drop change shim 45 (synthetic)																		●	●	●	●		●
6	147D	G0026801	Drop change shim 50 (synthetic)									●	●													
6	147D	G0234900	Drop change shim 50 (synthetic)																		●	●	●	●		●
6	147D	G0027201	Drop change shim 55 (synthetic)									●	●													
6	147D	G0235000	Drop change shim 55 (synthetic)																		●	●	●	●		●
6	147D	G0027601	Drop change shim 60 (synthetic)									●	●													
6	147D	G0235100	Drop change shim 60 (synthetic)																		●	●	●	●		●
6	147D	G0028001	Drop change shim 64 (synthetic)									●	●													
6	147D	G0235200	Drop change shim 64 (synthetic)																		●	●	●	●		●
6	147L	G0078600	Drop change shim 50 (synthetic)		●	●	●	●	●	●	●															
6	147L	G0078700	Drop change shim 55 (synthetic)		●	●	●	●	●	●	●															
6	147L	G0078800	Drop change shim 60 (synthetic)		●	●	●	●	●	●	●															
6	147L	G0078900	Drop change shim 64 (synthetic)		●	●	●	●	●	●	●															
6	147Y	G0204600	Drop change shim 45 (synthetic)											●	●	●	●	●	●	●					●	
6	147Y	G0136300	Drop change shim 50 (synthetic)											●	●	●	●	●	●	●					●	
6	147Y	G0136400	Drop change shim 55 (synthetic)											●	●	●	●	●	●	●					●	
6	147Y	G0136500	Drop change shim 60 (synthetic)											●	●	●	●	●	●	●					●	
6	147Y	G0136600	Drop change shim 64 (synthetic)											●	●		●	●	●	●					●	

RAFFAELLO

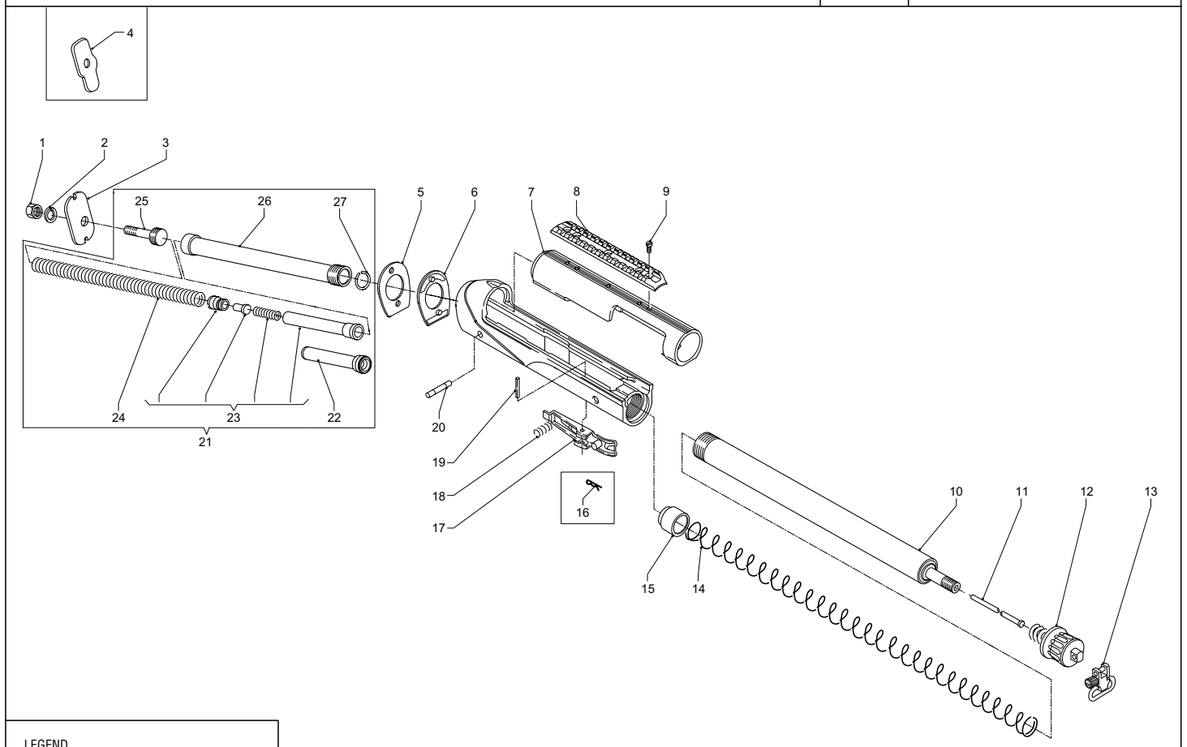

LEGEND
● = Original piece installed on standard model
A = Starting from number: **F031005**

02.12

No. Pos.	Código Manual	Código Proveedor	Descripción	P. Neto €	RAFFAELLO O.T.									RAFFAELLO N.T.												
					Black Eagle	121	123	Special	Special Lusso	Limited Editions O.T.	Executive	Special 20	Limited Editions 20 O.T.	Raffaello	Elegant	Criocomfort	Crio	Crio Evo	De Luxe	Limited Editions N.T.	20 Slug	Crio 20	Limited Editions 20 N.T.	Crio 28	Left Hand	Lord 20
7	098H	G0020301	Cover (steel)		●	●	●	●	●	●	●			●	●				●	●							
7	098H	G0020702	Scope mount cover (steel)		●	●	●	●	●	●	●			●	●	●	●	●	●								
7	098K	G0116801	Cover (ergal)									●	●									●	●	●			
7	098K	G0269300	Cover, anod. mat black																								●
7	098Y	G0137601	Cover (ergal)													●	●										
7	098Y	G0475700	Cover (ergal)															●									
7	418K	G0294700	Scope mount cover (ergal)																		●						
7	Y098	G0301100	Cover																							●	
8	260J	G0131400	Telescope guide (see accessories)		●	●	●	●	●	●				●	●	●	●		●	●							
9	261J	G0108201	Rail screw		●	●	●	●	●	●				●	●	●	●		●	●							
10	066B	F0010002	Magazine tube		●	●	●	●	●	●	●			●	●		●	●	●	●							
10	066B	F0163500	Magazine tube													●										●	
10	066B	F0084501	Three round limited magazine tube		●	●	●	●	●	●	●			●	●		●	●	●	●							
10	066B	F0165900	Three round limited magazine tube													●										●	
10	066D	F0010201	Magazine tube									●	●								●	●	●				●
10	066D	F0153900	Three round limited magazine tube									●	●								●	●	●				●
10	K066	F0265000	Three round limited magazine tube																					●			
11	067A	G0062400	Two round limiter		●	●	●	●	●	●	●	●	●	●	●	●	●	●	●	●	●	●	●			●	●
11	067A	G0016200	Three round limiter		●	●	●	●	●	●	●	●	●	●	●	●	●	●	●	●	●	●	●			●	●
12	146Y	F0291100	Fore-end follower assy																								●
12	146Y	F0064800	Fore-end follower (no swivel)							●			●	●	●	●	●		●	●	●	●	●			●	
12	146Y	F0253800	Fore-end follower (no swivel)															●									
12	154B	F0005403	Fore-end follower (no swivel)		●	●	●	●	●			●															
12	154B	F0005700	Fore-end follower (no swivel)								●																
12	K146	F0273500	Fore-end follower assy																					●			
13	188L	F0038501	Removable sling swivel		●	●	●	●	●	●		●	●	●	●	●	●	●	●	●	●	●	●	●	●	●	●
14	064A	G0033402	Magazine spring		●	●	●	●	●	●	●			●	●	●	●	●	●	●						●	
14	064D	G0047602	Magazine spring									●	●								●	●	●				●
14	K064	G0047501	Magazine spring																					●			
15	065D	G0474700	Magazine follower									●	●								●	●	●				●
15	065G	G0231201	Magazine follower		●	●	●	●	●	●	●			●	●		●	●	●	●							
15	065G	G0293200	Magazine follower													●										●	
15	K065	G0482300	Magazine follower																					●			

RAFFAELLO

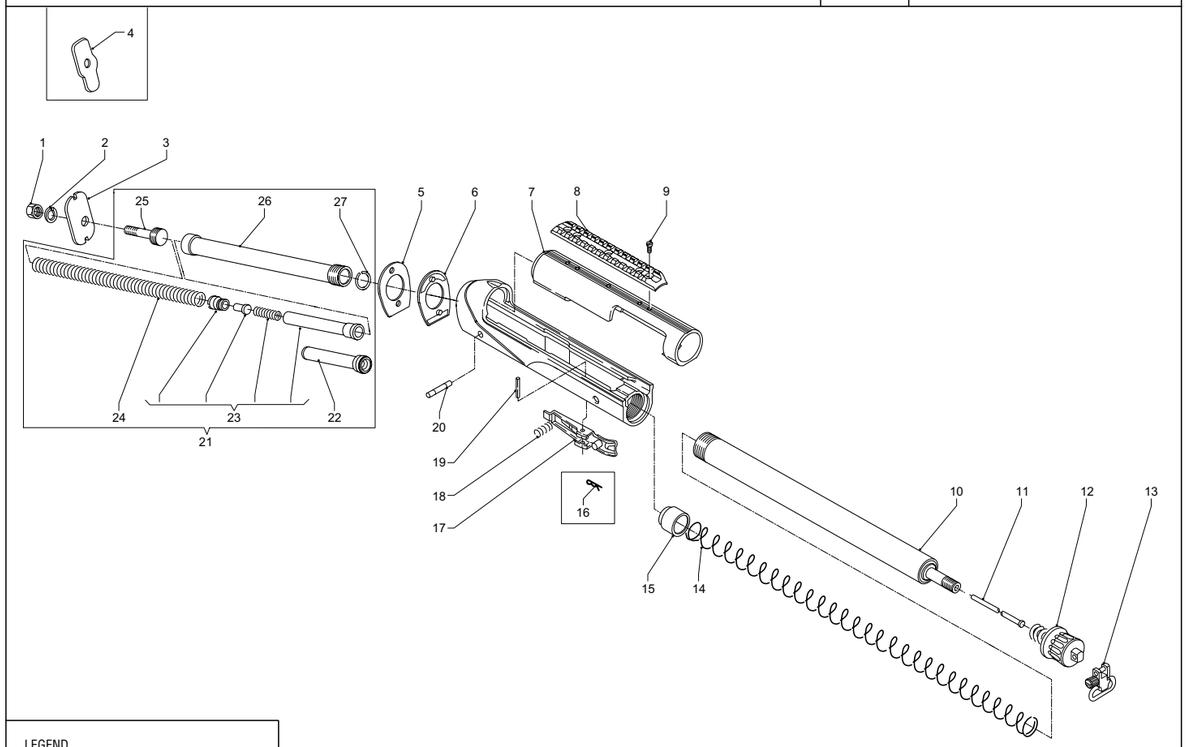

LEGEND
● = Original piece installed on standard model
A = Starting from number: **F031005**

02.14

No. Pos.	Código Manual	Código Proveedor	Descripción	P. Neto €	RAFFAELLO O.T.									RAFFAELLO N.T.												
					Black Eagle	121	123	Special	Special Lusso	Limited Editions O.T.	Executive	Special 20	Limited Editions 20 O.T.	Raffaello	Elegant	Criocomfort	Crio	Crio Evo	De Luxe	Limited Editions N.T.	20 Slug	Crio 20	Limited Editions 20 N.T.	Crio 28	Left Hand	Lord 20
16	155E	G0034000	Carrier latch pin retaining spring																					●		
17	057B	G0014301	Carrier latch		●	●	●	●	●	●	●	●	●	●	●	●	●		●	●	●	●	●		●	●
17	057B	G0489100	Carrier latch														●									
17	K057	F0308000	Carrier latch assembly																					●		
18	058J	G0126200	Carrier latch spring		●	●	●	●	●	●	●	●	●	●	●	●	●	●	●	●	●	●	●	●	●	●
19	056B	90002800	Carrier latch pin		●	●	●	●	●	●	●	●	●	●	●	●	●	●	●	●	●	●		●	●
19	156E	G0015401	Carrier latch pin																					●		
20	015A	G0030700	Trigger guard pin, blued		●	●	●							●	●	●									●	
20	015A	G0051500	Trigger guard pin, chrome-plated								●A						●									
20	015A	G0030900	Trigger guard pin, nickel-plated					●	●	●						●		●	●							
20	015D	G0030800	Trigger guard pin, blued																	●			●		●
20	015D	G0117101	Trigger guard pin, nickel-plated									●	●								●	●	●			
21	166D	F0032701	Recoil spring tube assembly									●	●													
21	166D	F0123701	Recoil spring tube assembly																	●	●	●			●
21	166Y	F0111701	Recoil spring tube assembly								●			●	●	●	●	●	●	●					●	
21	K166	F0275301	Recoil spring tube assembly																					●		
22	K055	G0517300	Recoil spring plunger pin																					●		
23	190D	F0023901	Light load assembly									●	●													
23	190D	F0123600	Light load assembly									●	●							●	●	●				●
23	190Y	F0111600	Light load assembly		●	●	●	●	●	●	●			●	●	●	●	●	●	●					●	
24	054B	G0218100	Recoil spring		●	●	●	●	●	●	●			●	●	●	●	●	●	●					●	
24	054D	G0047501	Recoil spring									●	●							●	●	●				●
24	K054	G0517200	Recoil spring																					●		
25	050B	F0111300	Stock retaining nut screw		●	●	●	●	●	●	●	●	●	●	●	●	●	●	●	●	●	●				
25	050G	F0111301	Stock retaining nut screw											●	●	●	●	●	●	●	●	●	●	●	●	●
26	049B	G0017901	Recoil spring tube		●	●	●	●	●	●	●	●	●													
26	049D	F0084601	Recoil spring tube								●			●	●	●	●	●	●	●	●	●			●	●
26	K049	F0275200	Recoil spring tube assembly, partial																					●		
27	183L	G0079800	Snap ring											●	●	●	●	●	●	●	●	●	●	●	●	●
–		G0217400	Fixing ring for stock locking cap		●	●	●	●	●	●	●	●	●	●	●	●	●	●	●	●	●	●	●	●	●	●
–		G0227500	Fixing ring for magazine tube		●	●	●	●	●	●	●			●	●	●	●	●	●	●					●	
–		G0235300	Fixing ring for magazine tube									●	●								●	●	●	●		●

RAFFAELLO

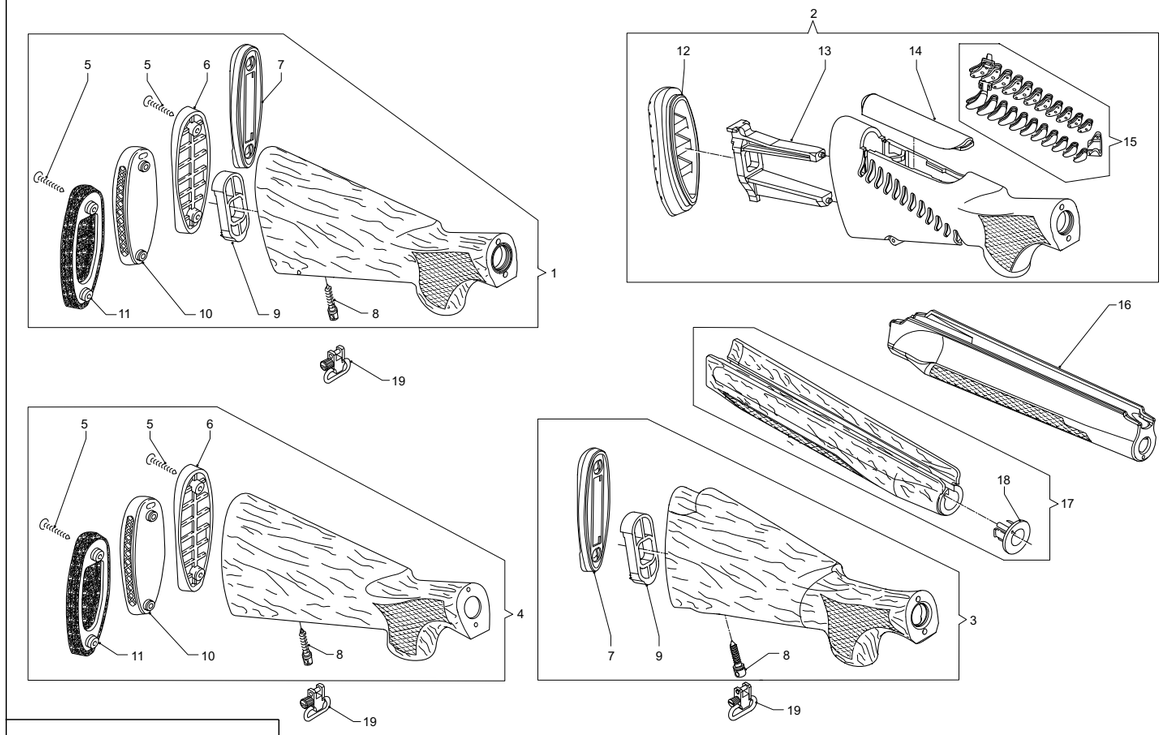

LEGEND
● = Original piece installed on standard model

02.16

No. Pos.	Código Manual	Código Proveedor	Descripción	P. Neto €	RAFFAELLO O.T.									RAFFAELLO N.T.												
					Black Eagle	121	123	Special	Special Lusso	Limited Editions O.T.	Executive	Special 20	Limited Editions 20 O.T.	Raffaello	Elegant	Criocomfort	Crio	Crio Evo	De Luxe	Limited Editions N.T.	20 Slug	Crio 20	Limited Editions 20 N.T.	Crio 28	Left Hand	Lord 20
1	163Y	F0259201	Stock assembly, L G4 BLB P/D VAR CS																●							
1	163Y	F0151700	Stock assembly, L GR3 E P/D VAR CSP											●												
1	163Y	F0253501	Wood stock GR3 oil (gel recoil pad) R.H./L.H.												●			●								
1	163Y	F0152100	Wood stock GR3 oil (rubber butt plate) R.H./L.H. 2V											●	●				●							
1	163Y	F0285200	Wood stock GR3 VER (rubber butt plate) R.H./L.H.														●									
1	381Y	G0266800	Wood stock GR4 oil (wood butt plate) R.H./L.H.																	●						
1	382D	G0266000	Wood stock GR4 cera (rubber butt plate) R.H./L.H.																				●			
2	159G	F0165800	Stock Comfort (without butt plate)													●									●	
3	176K	F0164500	Wood stock GR3 oil (gel recoil pad) R.H./L.H.																		●					
4	162B	F0015600	Wood stock GR3 VER (synthetic butt plate) R.H.			●	●	●																		
4	162B	F0015900	Wood stock GR3 VER (synthetic butt plate) L.H.			●	●	●	●																	
4	162B	G0098100	Wood stock GR4 cera (wood butt plate) R.H.							●																
4	162B	G0082300	Wood stock GR4 cera (wood butt plate) L.H.							●																
4	162B	F0016000	Wood stock GR4 VER (synthetic butt plate) R.H.						●																	
4	162B	G0063801	Wood stock GR5 cera (wood butt plate) R.H.								●															
4	163D	F0135400	Stock assembly, (rubber butt plate)																			●				
4	163D	F0264800	Stock assembly, L G1 CL P/D VAR CSP																					●		
4	163D	F0325900	Wood stock with leather cover																							●
4	163D	F0015801	Wood stock GR3 VER (rubber butt plate) R.H.									●														
4	163D	F0062600	Wood stock GR3 VER (rubber butt plate) L.H.									●														
4	163D	G0135000	Wood stock GR4 cera (rubber butt plate) R.H.										●													
4	163D	G0132401	Wood stock GR4 cera (rubber butt plate) R.H./L.H.										●													
4	163Y	F0087200	Wood stock GR3 VER (rubber butt plate) R.H. 2V											●												
4	164B	F0015700	Wood stock GR3 VER (rubber butt plate) R.H. 2V			●	●	●	●																	
4	177G	F0015201	Wood stock GR3 polished (rubber butt plate) 2V		●																					
5	062A	90007600	Butt plate screw		●	●	●	●	●	●		●	●	●	●	●	●		●			●				
5	062A	G0087800	Butt plate screw								●															
5	062A	G0098701	Butt plate screw																					●		
5	062H	G0202100	Butt plate screw															●			●					
5	062H	G0209600	Butt plate screw																	●			●			●
6	061A	L0019400	Wood butt plate								●															
6	061A	L0047500	Wood butt plate							●										●						

RAFFAELLO

02. 17

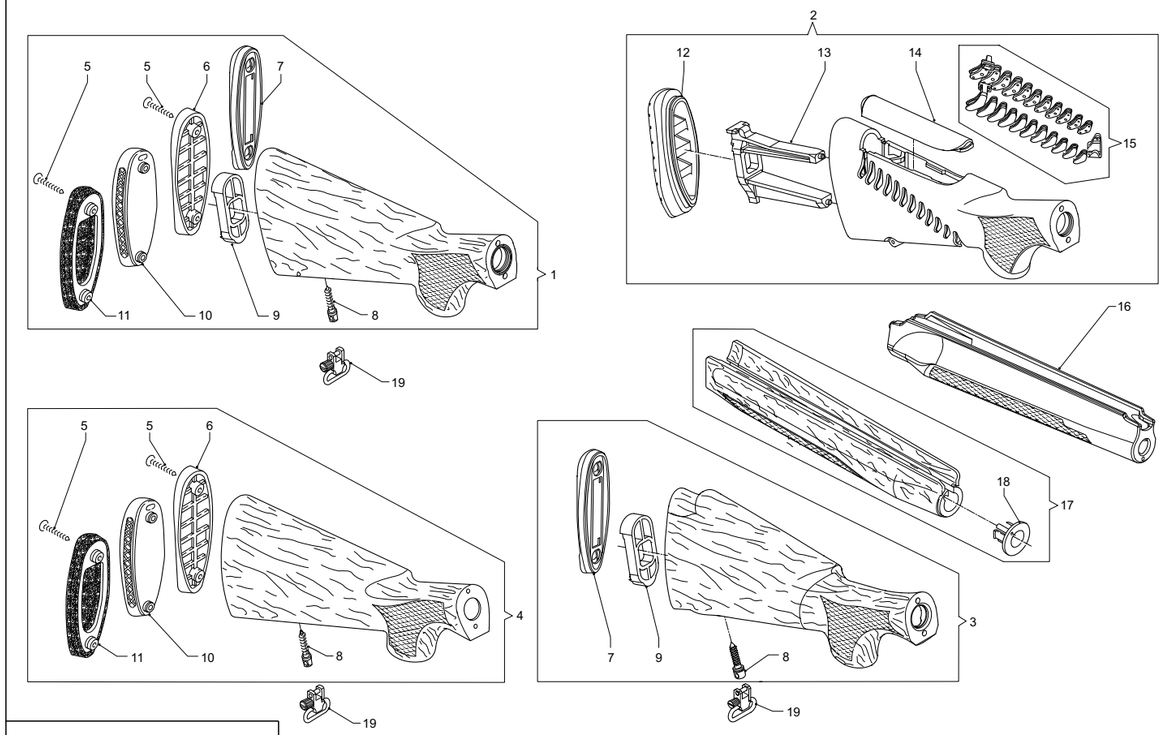

LEGEND
● = Original piece installed on standard model

02.18

No. Pos.	Código Manual	Código Proveedor	Descripción	P. Neto €	RAFFAELLO O.T.									RAFFAELLO N.T.												
					Black Eagle	121	123	Special	Special Lusso	Limited Editions O.T.	Executive	Special 20	Limited Editions 20 O.T.	Raffaello	Elegant	Criocomfort	Crio	Crio Evo	De Luxe	Limited Editions N.T.	20 Slug	Crio 20	Limited Editions 20 N.T.	Crio 28	Left Hand	Lord 20
6	061A	L0010901	Synthetic butt plate		●	●	●	●	●					●	●				●							
7	387D	F0138400	Gel recoil pad																		●					
7	387D	G0520800	Synthetic butt plate																							●
7	387Y	F0103900	Gel recoil pad															●								
8	063A	F0017100	Stock swivel		●	●	●	●	●	●	●	●														
8	152C	G0028800	Removable sling swivel screw											●	●		●	●	●	●	●	●	●	●		●
9	149Y	G0204801	Stock spacer											●	●		●	●	●	●	●	●	●			●
9	149Y	G0249701	Stock spacer																					●		
10	151C	G0297300	Rubber butt plate double ventilated		●	●	●	●	●	●	●	●	●	●	●		●	●	●	●		●	●	●		
11	151L	L0020800	Rubber butt plate									●	●				●					●	●			
11	K151	G0480700	Polyurethane recoil pad																					●		
12	151G	G0228600	Gel recoil pad, high R.H. 35 mm.													●										
12	151G	G0256200	Gel recoil pad, low R.H. 15 mm.													●										
12	151G	G0216401	Gel recoil pad, medium R.H. 25 mm.													●										
12	151M	G0232400	Gel recoil pad, high L.H. 35 mm.																						●	
12	151M	G0257800	Gel recoil pad, low L.H. 15 mm.																						●	
12	151M	G0216500	Gel recoil pad, medium L.H. 25 mm.																						●	
13	149C	G0215500	Comfort spacer													●									●	
14	380G	G0256100	Gel comb, high R.H.													●										
14	380G	G0295700	Gel comb, high L.H.																						●	
14	380G	G0215700	Gel comb, low													●									●	
14	380G	G0233100	Gel comb, medium													●									●	
15	379G	F0108700	Comfort chevrons assembly													●									●	
16	169Y	F0166000	Fore-end, synthetic Soft Touch "Window System"													●									●	
17	070B	F0086901	Wood fore-end, GR3 VER			●	●	●						●												
17	070B	F0154200	Wood fore-end, GR4 VER						●																	
17	070B	F0026201	Wood fore-end, GR5 cera								●															
17	070D	F0132600	Wood fore-end, GR3 VER									●										●				
17	070D	F0123800	Wood fore-end, GR4 cera										●										●			
17	070K	F0164600	Wood fore-end, GR3 oil																		●					
17	070Y	F0253300	Wood fore-end assembly																							●
17	K070	F0264700	Wood fore-end assembly, G1C ELEG SYST																					●		

RAFFAELLO

02. 19

RAFFAELLO — DRWG. 4 — STOCK AND FORE-END GROUP

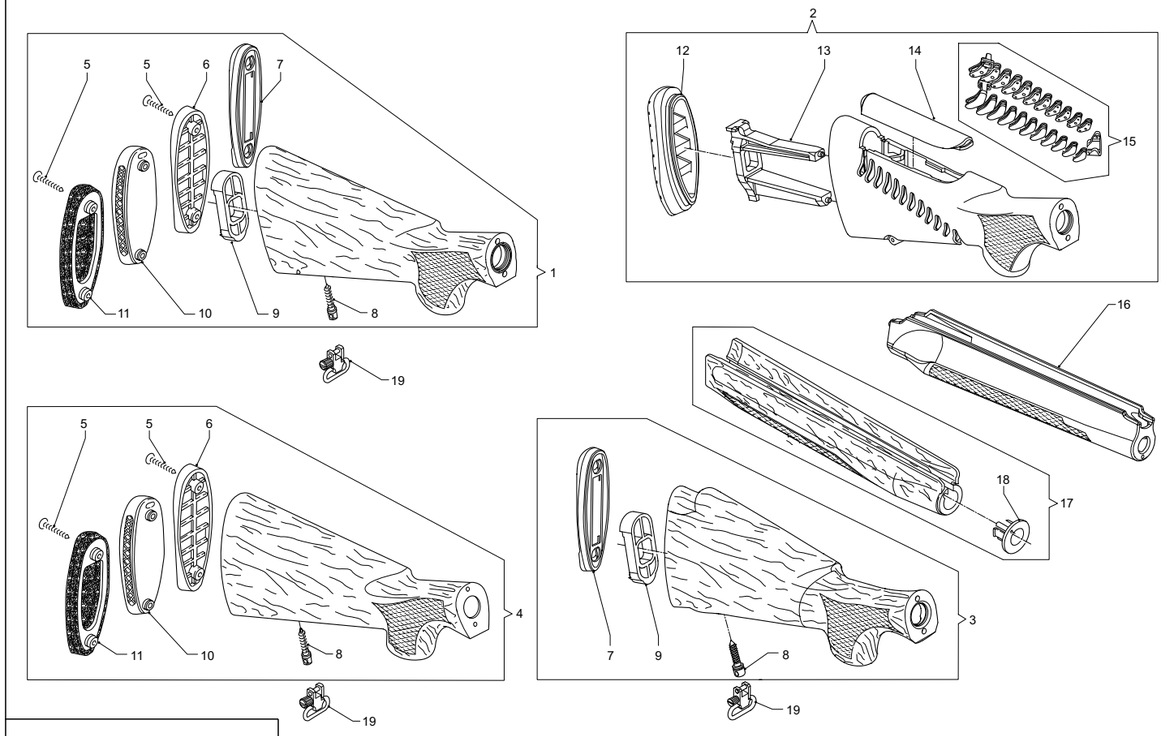

LEGEND
● = Original piece installed on standard model

No. Pos.	Código Manual	Código Proveedor	Descripción	P. Neto €	RAFFAELLO O.T.									RAFFAELLO N.T.												
					Black Eagle	121	123	Special	Special Lusso	Limited Editions O.T.	Executive	Special 20	Limited Editions 20 O.T.	Raffaello	Elegant	Criocomfort	Crio	Crio Evo	De Luxe	Limited Editions N.T.	20 Slug	Crio 20	Limited Editions 20 N.T.	Crio 28	Left Hand	Lord 20
17	070Y	F0063801	Wood fore-end assembly, GR4 EUR oil												●			●			●	●	●			
17	070Y	F0063501	Wood fore-end, GR3 VER														●									
17	070Y	F0064001	Wood fore-end, GR4 cera							●									●	●						
18	167L	F0037800	Cap retaining pin bushing assembly		●	●	●	●	●	●	●	●	●	●	●		●	●	●	●	●	●	●	●		●
19	188L	F0038501	Removable sling swivel											●	●	●	●	●	●	●	●	●	●	●	●	●
–		F0046700	Butt plate kit assembly, 370 mm.			●	●	●	●					●	●	●	●	●	●							
–		F0053100	Butt plate kit assembly, 370 mm.									●	●								●	●	●			●

RAFFAELLO

RAFFAELLO — DRWG. 5 — BARREL GROUP

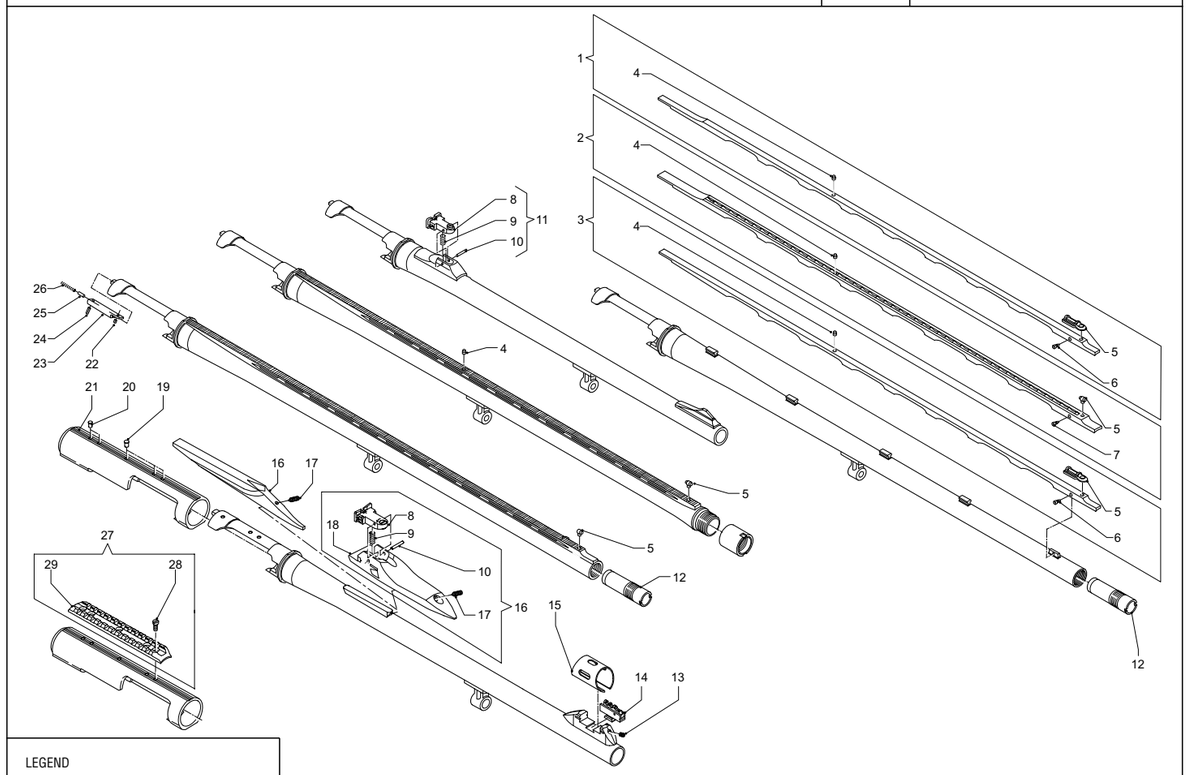

LEGEND
● = Original piece installed on standard model

No. Pos.	Código Manual	Código Proveedor	Descripción	P. Neto €	RAFFAELLO O.T.									RAFFAELLO N.T.												
					Black Eagle	121	123	Special	Special Lusso	Limited Editions O.T.	Executive	Special 20	Limited Editions 20 O.T.	Raffaello	Elegant	Criocomfort	Crio	Crio Evo	De Luxe	Limited Editions N.T.	20 Slug	Crio 20	Limited Editions 20 N.T.	Crio 28	Left Hand	Lord 20
1	199L		Hunting high rib barrel assembly (see accessories)																							
2	200L		Shooting rib barrel assembly (see accessories)																							
3	201L		Hunting low rib barrel assembly (see accessories)																							
4	153A	G0021501	Intermediate sight									●				●	●					●	●	●	●	●
5	044B	G0020900	Fluorescent front sight, short		●	●	●	●	●	●	●	●	●	●	●				●	●		●	●	●		
5	044K	F0259700	Fluorescent front sight, long																			●	●			●
5	044Y	F0166201	Fluorescent front sight, long													●	●	●							●	
6	184L	G0079201	Hunting rib fixing screw													●	●	●				●				
7	185L	G0079300	Shooting rib fixing screw													●	●	●								
8	127K	F0165600	Rear sight assembly																		●					
8	127N	F0013200	Rear sight for Slug barrel - scope mount		●	●	●	●	●	●	●			●	●	●	●	●	●	●						
8	127N	F0027000	Rear sight for Slug barrel - adjustable rear sight		●	●	●	●	●	●	●			●	●	●	●	●	●	●						
9	259N	G0063700	Rear sight spring		●	●	●	●	●	●	●			●	●	●	●	●	●	●	●					
10	035A	90003100	Rear sight fixing pin		●	●	●	●	●	●	●			●	●	●	●	●	●	●	●					
11	416K	F0164400	Rear sight assembly for Slug barrel (see accessories)																		●					
12	213D		Internal choke																							
12	213G	–	Internal choke (see accessories)																							
13	071A	90005800	Front-sight guide grub screw		●	●	●	●	●	●	●			●	●	●	●	●	●	●	●					
14	110W	F0090400	Adjustable front-sight assembly																		●					
15	111W	F0097800	Front-sight protection guard																		●					
16	293K	G0294400	Rib barrel (see accessories)																		●					
16	416K	F0164400	Complete rear sight kit assembly																		●					
17	292W	90015100	Rib barrel fixing grub screw																		●					
17	309W	90015200	Fixing grub screw for rear sight carrier																		●					
18	126K	G0294500	Rear sight carrier																		●					
19	294K	G0299400	Cap/plug for cover holes																		●					
20	294W	G0185401	Cap/plug for threaded cover holes																		●					
21	418K	G0294700	Scope mounting cover																		●					
22	172D	G0135600	Front ejector retaining rivet									●	●								●	●	●	●		●
22	172J	G0128000	Front ejector retaining rivet		●	●	●	●	●	●	●			●	●	●	●	●	●	●					●	
23	168J	G0092700	Ejector frame Magnum		●	●	●	●	●	●	●	●	●	●	●	●	●	●	●	●	●	●	●		●	●
23	K168	G0481001	Ejector frame																					●		

RAFFAELLO

RAFFAELLO	DRWG. 5	BARREL GROUP

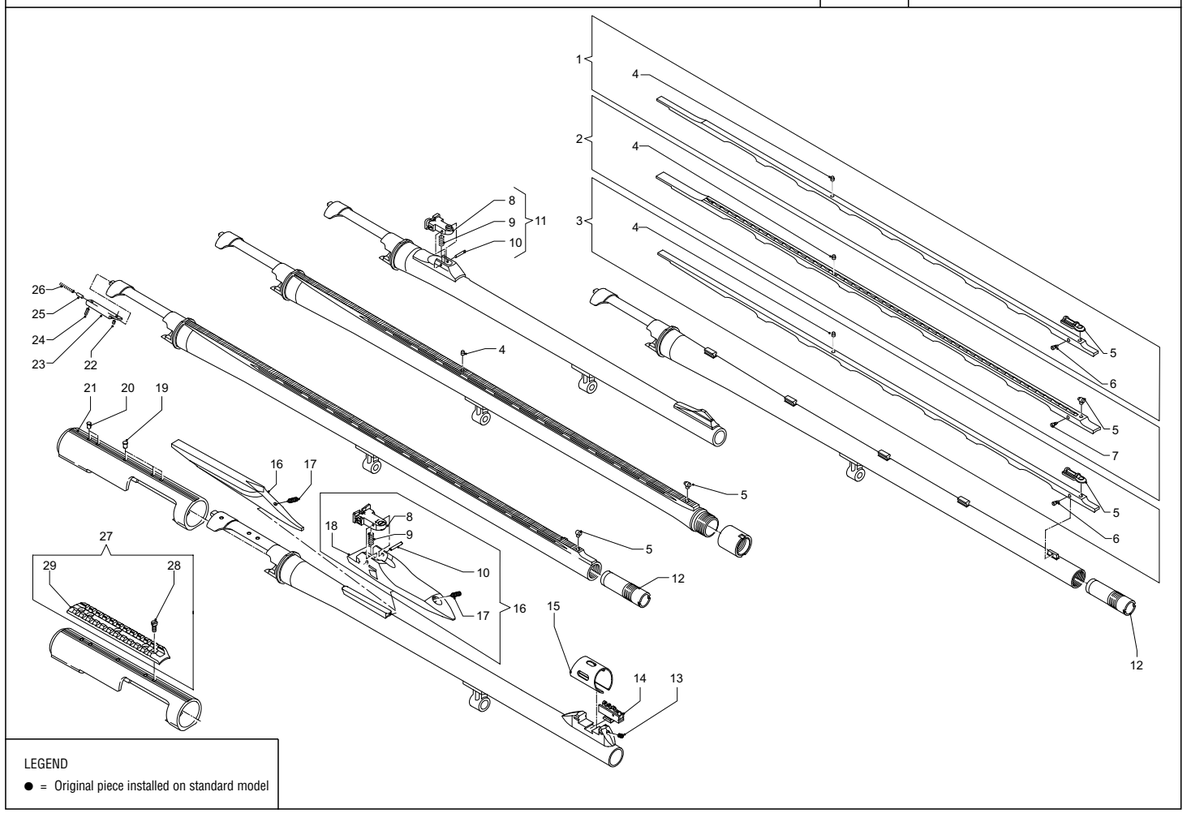

LEGEND
● = Original piece installed on standard model

02.24

No. Pos.	Código Manual	Código Proveedor	Descripción	P. Neto €	RAFFAELLO O.T.									RAFFAELLO N.T.												
					Black Eagle	121	123	Special	Special Lusso	Limited Editions O.T.	Executive	Special 20	Limited Editions 20 O.T.	Raffaello	Elegant	Criocomfort	Crio	Crio Evo	De Luxe	Limited Editions N.T.	20 Slug	Crio 20	Limited Editions 20 N.T.	Crio 28	Left Hand	Lord 20
24	047D	G0176000	Rear ejector retaining rivet									●	●								●	●	●	●		●
24	047J	G0130800	Rear ejector retaining rivet		●	●	●	●	●	●	●			●	●	●	●	●	●	●					●	
25	045J	G0481101	Ejector																					●		
25	045J	G0089101	Ejector pin		●	●	●	●	●	●	●	●	●	●	●	●	●	●	●	●	●	●	●		●	●
26	046J	G0128100	Ejector pin spring		●	●	●	●	●	●	●	●	●	●	●	●	●	●	●	●	●	●	●		●	●
26	K046	G0538700	Ejector pin spring																					●		
27	417K	F0165500	Scope mount support kit (see accessories)																		●					
28	260J	G0131400	Telescope guide (see accessories)		●	●	●	●	●	●				●	●	●	●		●	●						
28	260W	F0165500	Scope mount support																		●					
29	261J	G0108201	Rail screw		●	●	●	●	●	●				●	●	●	●		●	●						
–		G0020800	Threaded locking ring		●	●	●	●	●	●	●			●	●	●	●	●	●	●						

RAFFAELLO

2.2

RAFFAELLO BLACK - POWER BORE

RAFFAELLO BLACK - POWER BORE | DRWG. 1 | TRIGGER GUARD GROUP

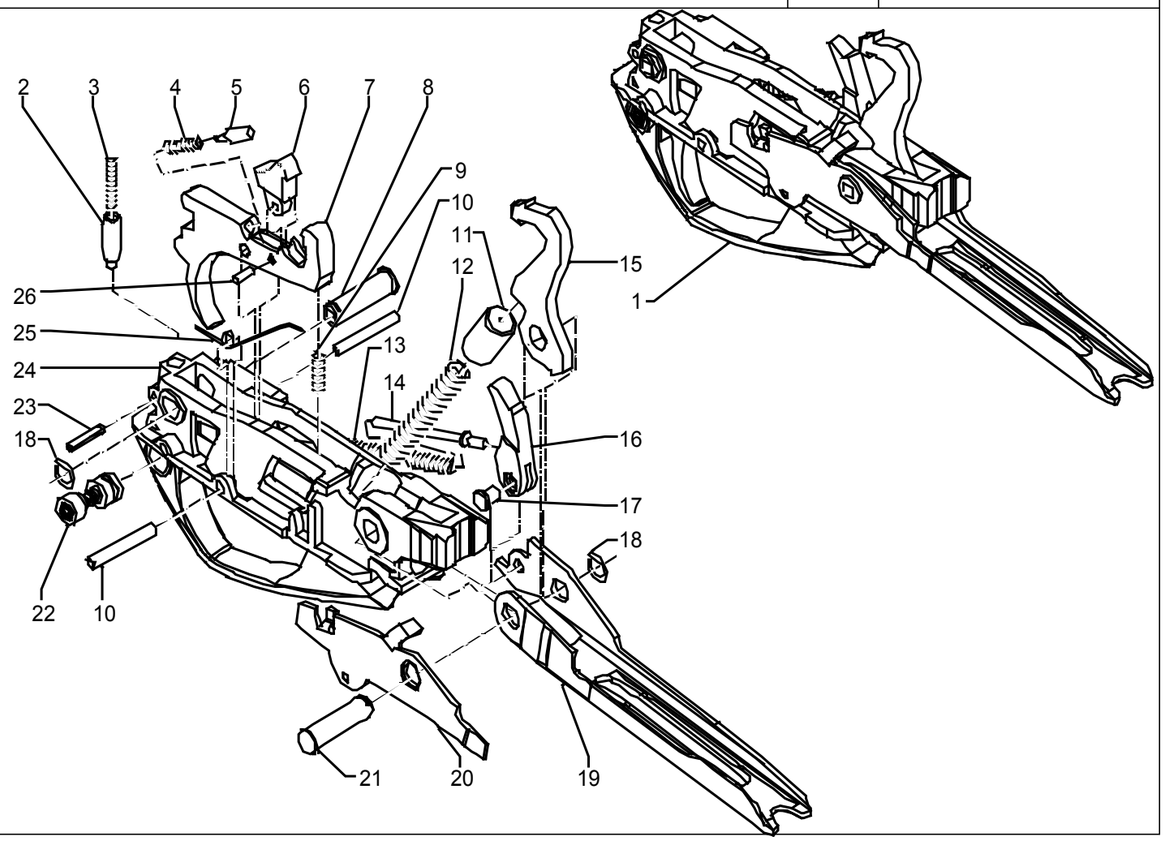

02.02

N.Pos	Código Proveedor	Descripción		Power Bore C. 12	Black C.12	
1	F0327700	Assieme guardia		●	●	
2	G0054200	Pistoncino		●	●	
3	G0032001	Molla		●	●	
4	G0128500	Molla		●	●	
5	G0089101	Perno		●	●	
6	G0001300	Dente agganciamento		●	●	
7	G0002403	Grilletto		●	●	
8	G0583300	Bussola		●	●	
9	G0124000	Molla		●	●	
10	90008800	Rullino		●	●	
11	G0000101	Boccola		●	●	
12	G0218200	Molla		●	●	
13	G0124200	Molla		●	●	
14	G0004301	Perno		●	●	
15	G0001000	Cane		●	●	
16	G0001400	Dente arresto		●	●	
17	G0003900	Perno		●	●	
18	G0032300	Molla		●	●	
19	G0587800	Elevatore		●	●	
20	G0583400	Leva discesa cartuccia		●	●	
21	G0004400	Perno		●	●	
22	G0583200	Guardia		●	●	
23	G0000300	Bottone sicura		●	●	
24	90003200	Spina elastica		●	●	
25	G0032800	Molla		●	●	
26	G0004001	Perno		●	●	

RAFFAELLO BLACK - POWER BORE

RAFFAELLO BLACK - POWER BORE | DRWG. 2 | BOLT GROUP

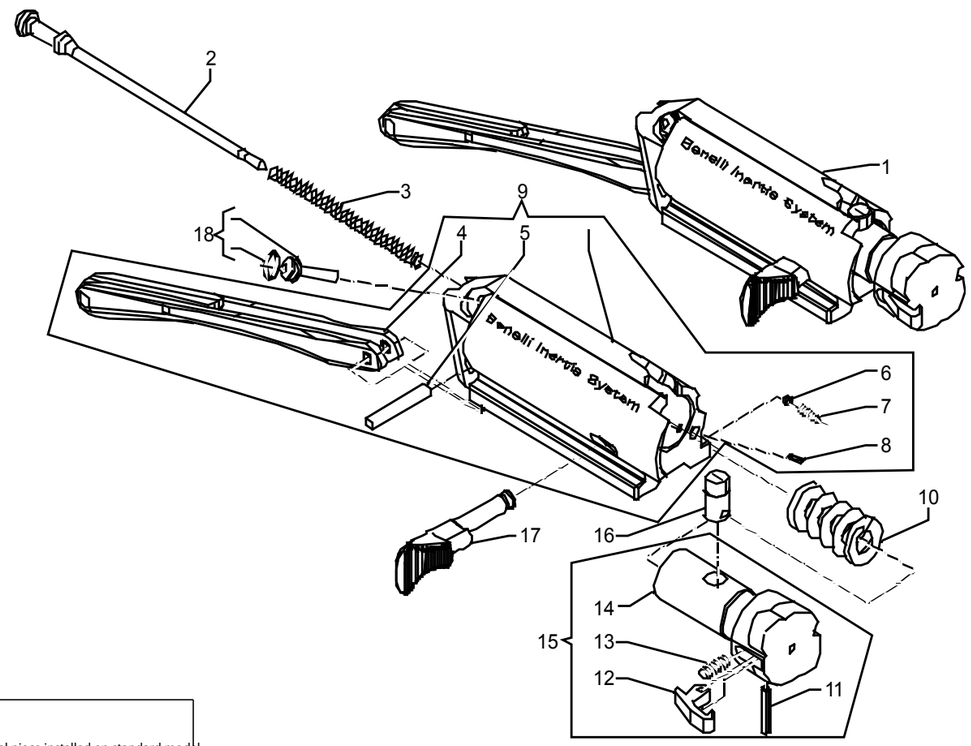

LEGEND
● = Original piece installed on standard model

02.06

N.Pos	Código Proveedor	Descripción		Power Bore C. 12	Black C.12	
1	F0328000	Assieme otturatore		●	●	
2	G0007301	Percussore		●	●	
3	G0033101	Molla		●	●	
4	F0327900	Otturatore parziale		●	●	
5	G0079100	Biella		●	●	
6	G0091400	Perno		●	●	
7	G0007500	Perno		●	●	
8	G0126800	Molla		●	●	
9	90021600	Spina		●	●	
10	G0032901	Molla		●	●	
11	F0327800	Assieme testa di chiusura		●	●	
12	90003100	Spina		●	●	
13	G0004901	Estrattore		●	●	
14	G0126900	Molla		●	●	
15	G0007900	Perno		●	●	
16	G0583500	Manetta		●	●	
17	F0004501	Perno arresto		●	●	

RAFFAELLO BLACK - POWER BORE

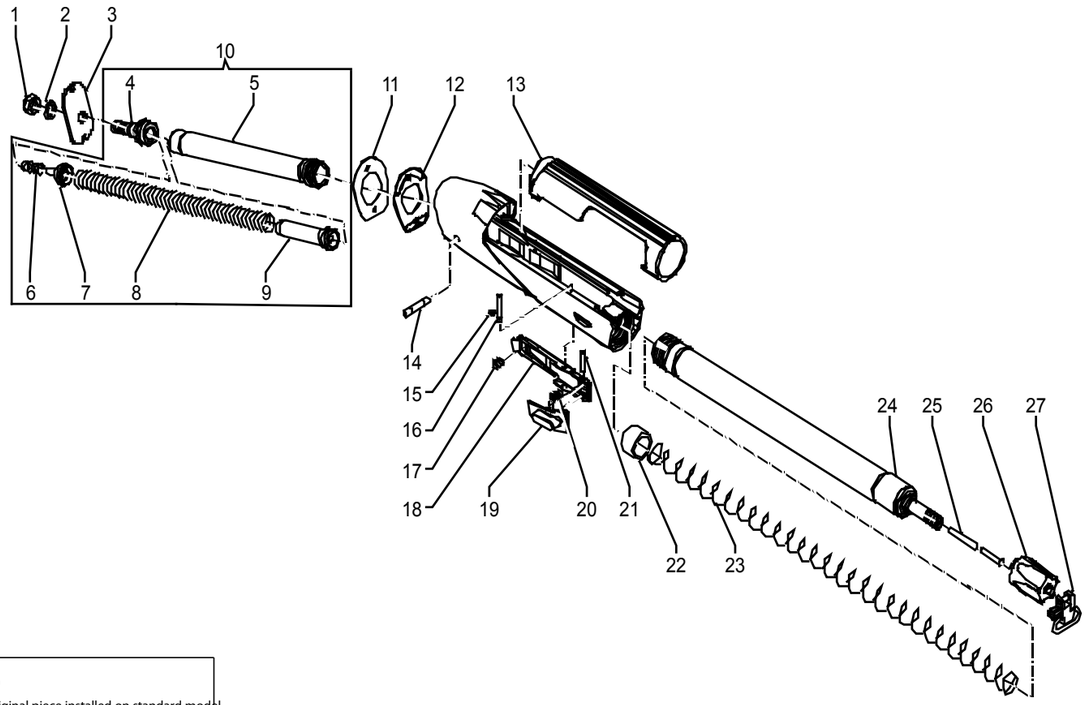

LEGEND
● = Original piece installed on standard model

02. 10

N.Pos	Código Proveedor	Descripción		Power Bore C. 12	Black C.12	
1	90006000	Dado		●	●	
2	90004800	Rosetta elastica		●	●	
3	G0187500	Piastrino serraggio calcio piega 50/55 dx/sx (acciaio)		●	●	
3	G0187600	Piastrino serraggio calcio piega 45/60 dx/sx (acciaio)		●	●	
3	G0240901	Piastrino serraggio calcio piega 64 dx/sx (acciaio)		●	●	
4	F0327100	Assieme tubo guida molla		●	●	
5	F0327000	Tappo molla biella		●	●	
6	F0275200	Tubo parziale		●	●	
7	G0581900	Perno		●	●	
8	G0594500	Molla		●	●	
9	G0581800	Perno		●	●	
10	G0088800	Molla		●	●	
11	G0583900	Spessore deviazione piega		●	●	
12	G0582000	Spessore variazione piega 45		●	●	
12	G0582100	Spessore variazione piega 50		●	●	
12	G0582200	Spessore variazione piega 55		●	●	
12	G0582300	Spessore variazione piega 60		●	●	
12	G0582400	Spessore variazione piega 65		●	●	
13	G0580200	Fodero		●	●	
14	F0010002	Tubo serbatoio		●	●	
15	G0016200	Riduttore		●	●	
16	F0327600	Cappellotto		●	●	
17	F0038501	Portabretella amovibile		●	●	
18	G0593400	Molla		●	●	
19	G0231202	Cappellotto		●	●	

RAFFAELLO BLACK - POWER BORE

RAFFAELLO BLACK - POWER BORE | DRWG. 3 | RECEIVER - MAGAZINE GROUP

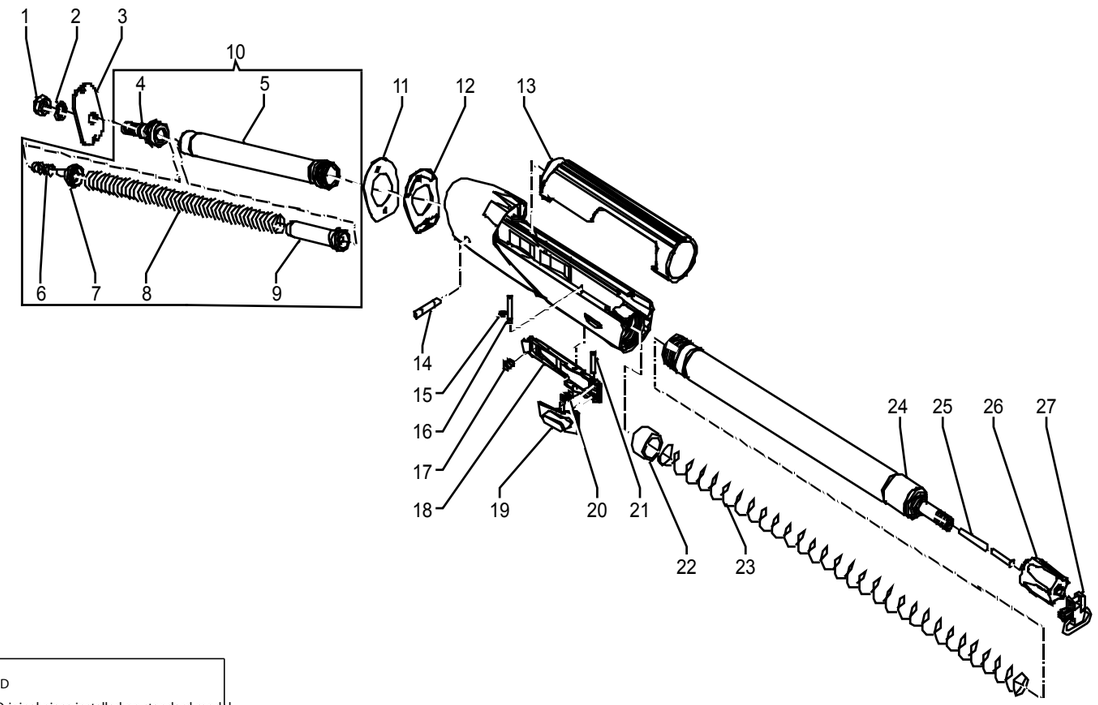

LEGEND
● = Original piece installed on standard model

02. 10

N.Pos	Código Proveedor	Descripción		Power Bore C. 12	Black C.12	
20	F0332200	Assieme leva fermo cartuccia		●	●	
21	G0126200	Molla		●	●	
22	G0583800	Perno		●	●	
23	90031200	Seeger		●	●	
24	G0584100	Perno fissaggio guardia nichelato		●		
24	G0585500	Perno fissaggio guardia brunito			●	
	F0327200	Assieme kit portabretelle				
	G0582600	Leva fermo cartuccia				
	G0164200	Perno leva comando				

RAFFAELLO BLACK - POWER BORE

RAFFAELLO BLACK - POWER BORE | DRWG. 4 | STOCK AND FORE-END GROUP

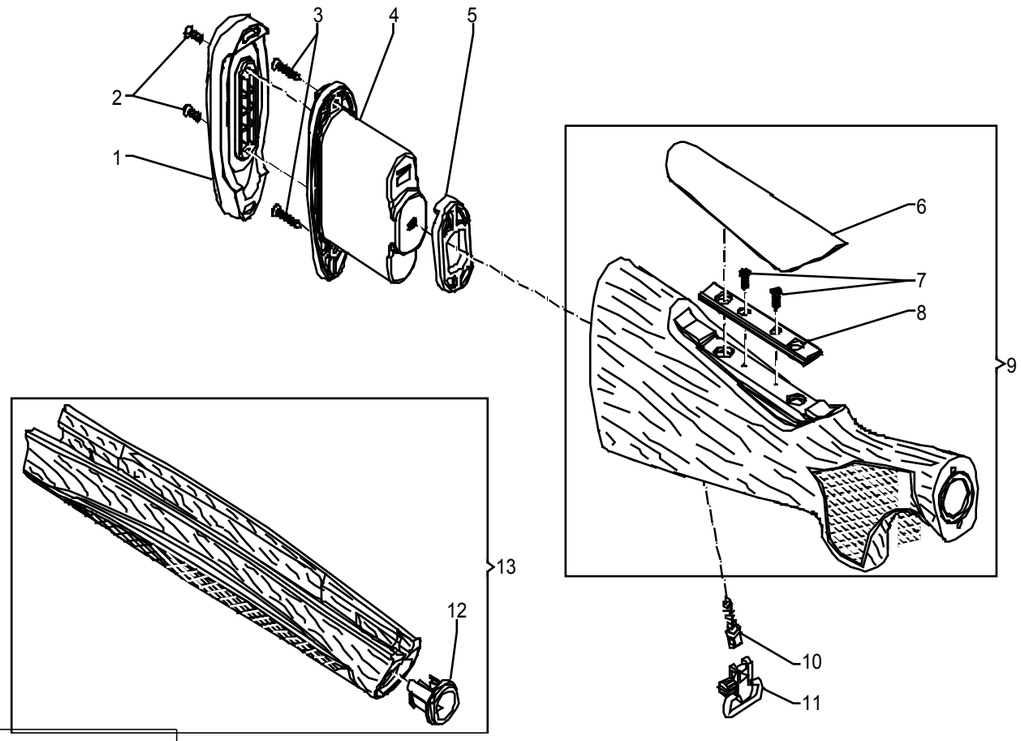

LEGEND
● = Original piece installed on standard model

02. 16

N.Pos	Código Proveedor	Descripción		Power Bore C. 12	Black C.12	
1	F0330900	Kit calciolo poliuretano LOP 380 mm		●	●	
2	90031700	Vite UNI 7688 M 4x12		●	●	
3	F0341500	Assieme calciolo poliuretano LOP 365 mm		●	●	
4	90031400	Vite autofilettante		●	●	
5	F0348100	Case system LOP 365 mm		●	●	
6	G0584000	Distanziale		●	●	
7	F0329400	Assieme calcio legno GR3 LOP 365 mm		●		
7	F0329500	Assieme calcio legno GR2 LOP 365 mm			●	
8	F0331100	Assieme calcio legno GR3 LOP 350 mm		●		
8	F0331300	Assieme calcio legno GR2 LOP 350 mm			●	
9	F0341600	Nasello poliuretano basso		●	●	
10	90031300	Vite autofilettante		●	●	
11	F0329300	Basetta nasello		●	●	
12	F0335000	Nasello poliuretano alto		●	●	
13	G0028800	Vite		●	●	
15	F0327400	Assieme astina legno GR3		●		
15	F0328700	Assieme astina legno GR2			●	
16	F0328200	Bussola astina		●	●	
17	F0335100	Kit Comfort completo LOP 350 mm		●	●	
18	F0348300	Assieme calciolo poliuretano LOP 350 mm		●	●	
19	F0348200	Assieme case system LOP 350 mm		●	●	

RAFFAELLO BLACK - POWER BORE

RAFFAELLO BLACK - POWER BORE | DRWG. 5 | BARREL GROUP

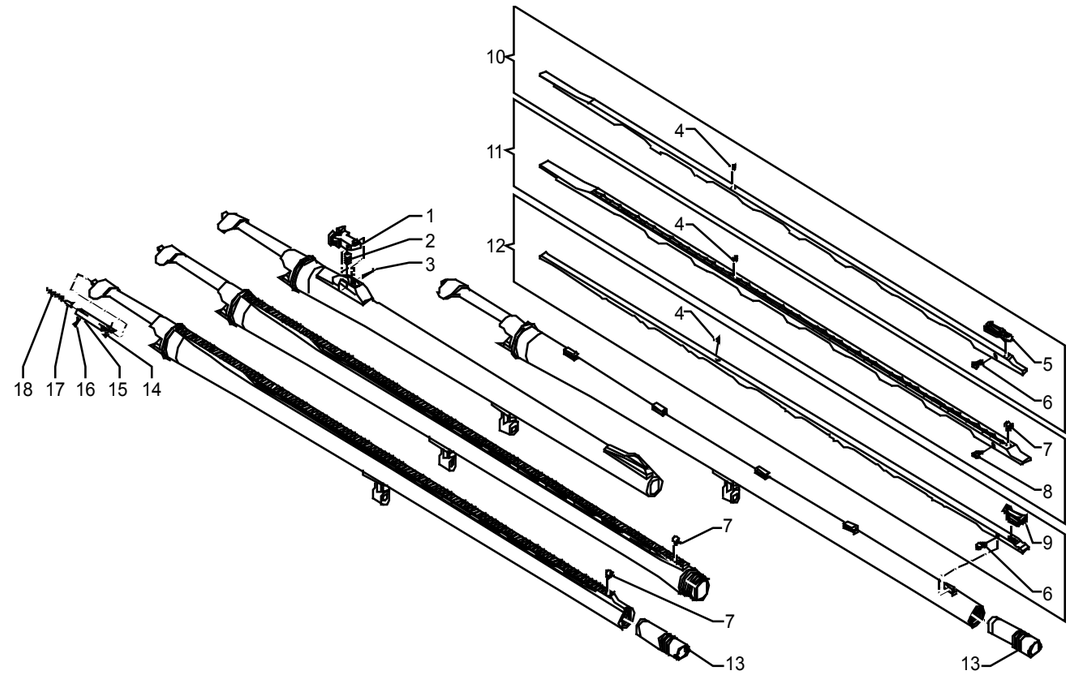

LEGEND
● = Original piece installed on standard model

02. 22

N.Pos	Código Proveedor	Descripción		Power Bore C. 12	Black C.12	
1	F0148402	Bindella alta caccia (vedi accessori)				
2	G0021500	Mirino intermedio		●		
4	G0079201	Vite		●		
5	F0121001	Bindella tiro (vedi accessori)				
6	G0020900	Mirino fluorescente		●	●	
7	G0079300	Vite		●		
8	F0328900	Bindella bassa caccia (vedi accessori)				
10	–	Strozzatore interno (vedi accessori)				
11	F0013200	Tacca di mira		●	●	
12	G0063700	Molla		●	●	
13	90003100	Spina		●	●	
14	90001200	Anello OR per canna strozzatore		●	●	
15	–	Strozzatore esterno (vedi accessori)				
16	G0020800	Ghiera protezione filetto		●	●	
17	G0128000	Ribattino		●	●	
18	G0092700	Corpo espulsore (camera 2" 3/4)		●	●	
18	G0092700	Corpo espulsore (camera 3" - Magnum)		●	●	
19	G0130800	Perno		●	●	
20	G0089101	Perno		●	●	
21	G0128100	Molla (camera 2" 3/4)		●	●	
21	G0128100	Molla (camera 3" - Magnum)		●	●	

RAFFAELLO BLACK - POWER BORE

03

SUPER BLACK EAGLE

SUPER BLACK EAGLE
CAMO
LEFT HAND
LEFT HAND CAMO

SUPER BLACK EAGLE II

SUPER BLACK EAGLE II
CAMO
RIGATO
LEFT HAND
LEFT HAND CAMO

03.01

SUPER BLACK EAGLE - SUPER BLACK EAGLE II | **DRWG. 1** | **TRIGGER GUARD GROUP**

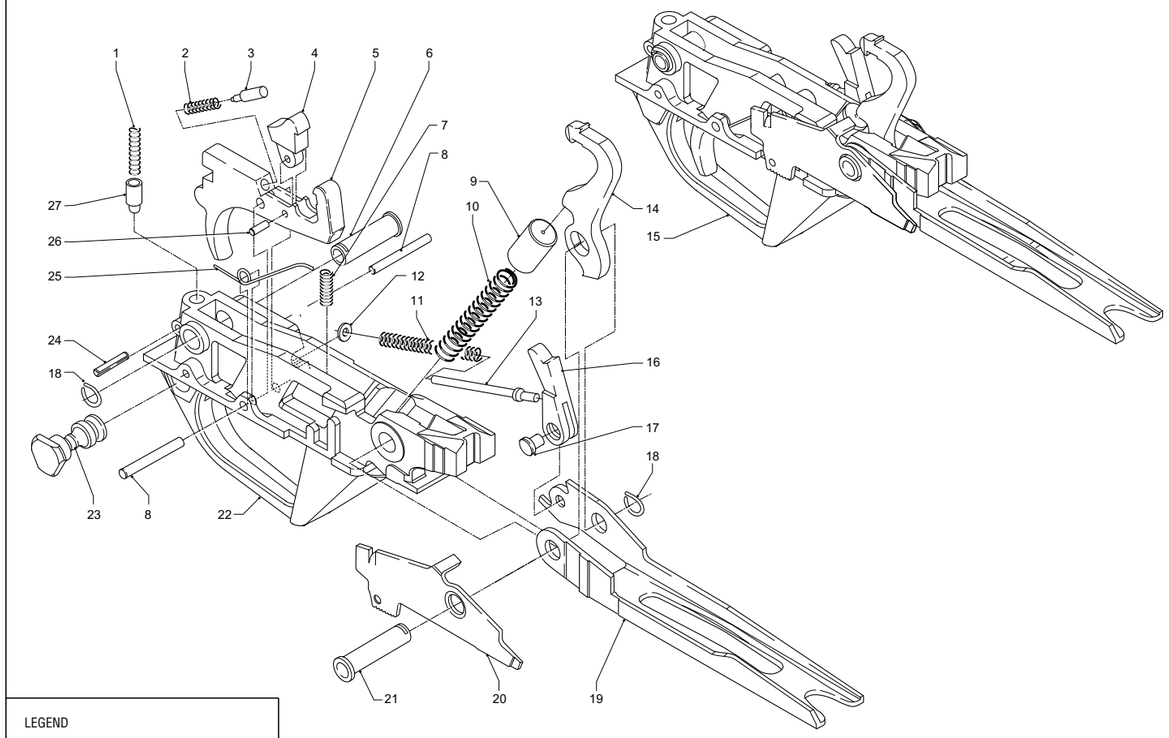

LEGEND
● = Original piece installed on standard model

03.02

No. Pos.	Código Manual	Código Proveedor	Descripción	P. Neto €	SUPER BLACK EAGLE				SUPER BLACK EAGLE II				
					Super Black Eagle	Camo	Left Hand	Left Hand Camo	Super Black Eagle II	Camo	Rigato	Left Hand	Left Hand Camo
1	007A	G0032001	Safety plunger spring		●	●	●	●	●	●	●	●	●
2	277J	G0128500	Disconnector spring		●	●	●	●	●	●	●	●	●
3	045J	G0089101	Disconnector pin		●	●	●	●	●	●	●	●	●
4	005B	G0001200	Disconnector hammer		●	●	●	●	●	●	●	●	●
5	009B	G0002303	Trigger (blued)		●	●	●	●	●	●	●	●	●
5	009B	G0002403	Trigger (chrome-plated)		●		●		●				
6	016J	G0089900	Trigger pin bush		●	●	●	●	●	●	●	●	●
7	011J	G0124000	Trigger spring		●	●	●	●	●	●	●	●	●
8	010L	90008800	Trigger pin		●	●	●	●	●	●	●	●	●
9	003A	G0000101	Hammer spring cap		●	●	●	●	●	●	●	●	●
10	004A	G0218200	Hammer spring		●	●	●	●	●	●	●	●	●
11	021A	G0032100	Carrier spring		●	●	●	●					
11	021J	G0124200	Carrier spring						●	●	●	●	●
12	243F	90010200	Washer						●	●	●	●	●
13	022A	G0004301	Bolt latch pin		●	●	●	●	●	●	●	●	●
14	002B	G0001000	Hammer		●	●	●	●	●	●	●	●	●
15	001G	F0001201	Trigger group assembly, blued		●	●							
15	001G	F0107900	Trigger group assembly, blued						●	●	●		
15	001G	F0107800	Trigger group assembly, chrome-plated						●				
15	001M	F0058000	Trigger group assembly, blued				●	●					
15	001M	F0110300	Trigger group assembly, blued									●	●
16	019A	G0001400	Bolt stop tooth		●	●	●	●	●	●	●	●	●
17	020A	G0003900	Bolt stop tooth pin		●	●	●	●	●	●	●	●	●
18	018A	G0032300	Trigger guard pin spring		●	●	●	●	●	●	●	●	●
19	017G	G0001700	Carrier		●	●			●	●	●		
19	017M	G0122000	Carrier				●	●				●	●
20	076L	G0076600	Cartridge drop lever		●	●	●	●	●	●	●	●	●
21	097H	G0004400	Carrier pin		●	●	●	●	●	●	●	●	●
22	014G	G0002902	Trigger guard		●	●	●	●					
22	014G	G0208100	Trigger guard						●	●	●	●	●
23	013G	G0106700	Hand safety button		●	●	●	●					
23	013J	G0123800	Hand safety button						●	●	●	●	●

SUPER BLACK EAGLE - SUPER BLACK EAGLE II

SUPER BLACK EAGLE - SUPER BLACK EAGLE II | DRWG. 1 | TRIGGER GUARD GROUP

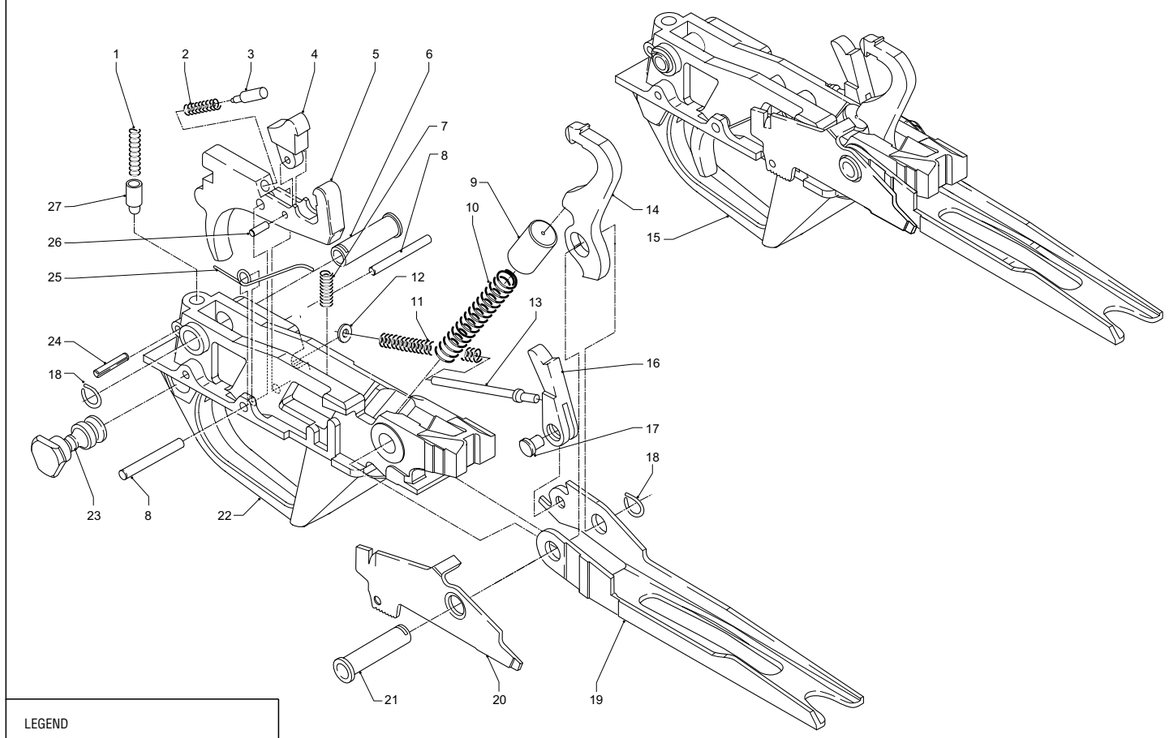

LEGEND
● = Original piece installed on standard model

03.04

No. Pos.	Código Manual	Código Proveedor	Descripción	P. Neto €	SUPER BLACK EAGLE				SUPER BLACK EAGLE II				
					Super Black Eagle	Camo	Left Hand	Left Hand Camo	Super Black Eagle II	Camo	Rigato	Left Hand	Left Hand Camo
24	012A	90003200	Safety spring retaining pin		●	●	●	●	●	●	●	●	●
25	077B	G0032800	Cartridge drop lever spring		●	●	●	●	●	●	●	●	●
26	023A	G0004001	Disconnector pin		●	●	●	●	●	●	●	●	●
27	008A	G0054200	Hand safety plunger		●	●	●	●	●	●	●	●	●

SUPER BLACK EAGLE - SUPER BLACK EAGLE II

SUPER BLACK EAGLE - SUPER BLACK EAGLE II | DRWG. 2 | BOLT GROUP

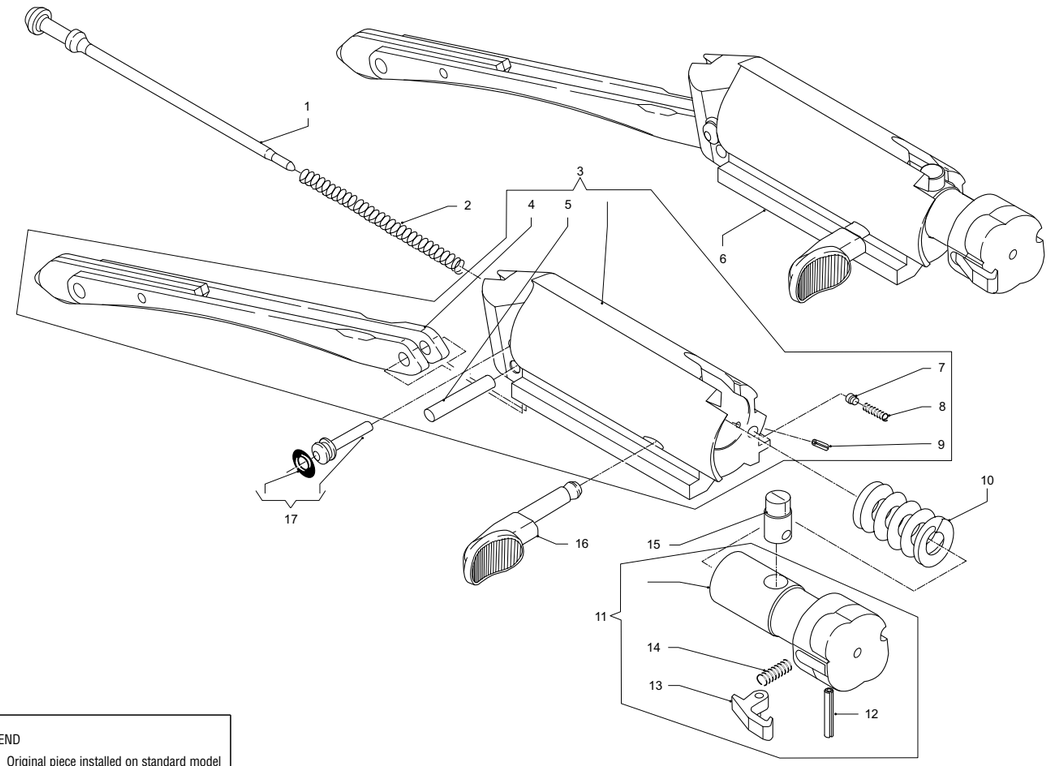

LEGEND
● = Original piece installed on standard model

03.06

No. Pos.	Código Manual	Código Proveedor	Descripción	P. Neto €	SUPER BLACK EAGLE				SUPER BLACK EAGLE II				
					Super Black Eagle	Camo	Left Hand	Left Hand Camo	Super Black Eagle II	Camo	Rigato	Left Hand	Left Hand Camo
1	025B	G0007301	Firing pin		●	●	●	●	●	●	●	●	●
2	037A	G0033101	Firing pin spring		●	●	●	●	●	●	●	●	●
3	026G	F0003900	Bolt, partial		●	●			●	●	●		
3	026M	F0058200	Bolt, partial				●	●				●	●
4	027G	G0080500	Link		●	●	●	●	●	●	●	●	●
5	029J	G0091400	Link pin		●	●	●	●	●	●	●	●	●
6	024G	F0002800	Bolt group		●	●			●	●	●		
6	024M	F0058400	Bolt group				●	●				●	●
7	039A	G0007500	Bolt handle pin		●	●	●	●	●	●	●	●	●
8	038J	G0126800	Bolt handle retaining spring		●	●	●	●	●	●	●	●	●
9	040A	90021600	Bolt handle spring retaining pin		●	●	●	●	●	●	●	●	●
10	036A	G0032901	Inertia spring		●	●	●	●	●	●	●	●	●
11	165A	F0004601	Locking head assembly		●	●			●	●	●		
11	165E	F0004701	Locking head assembly				●	●				●	●
12	035A	90003100	Extractor pin		●	●	●	●	●	●	●	●	●
13	034A	G0004901	Extractor		●	●			●	●	●		
13	034E	G0005000	Extractor				●	●				●	●
14	033J	G0126900	Extractor spring		●	●	●	●	●	●	●	●	●
15	031B	G0007900	Locking head pin		●	●			●	●	●		
15	031E	G0007800	Locking head pin				●	●				●	●
16	030C	G0005301	Bolt handle		●	●	●	●	●	●	●	●	●
17	028A	F0004501	Firing pin retaining pin		●	●	●	●	●	●	●	●	●

SUPER BLACK EAGLE - SUPER BLACK EAGLE II

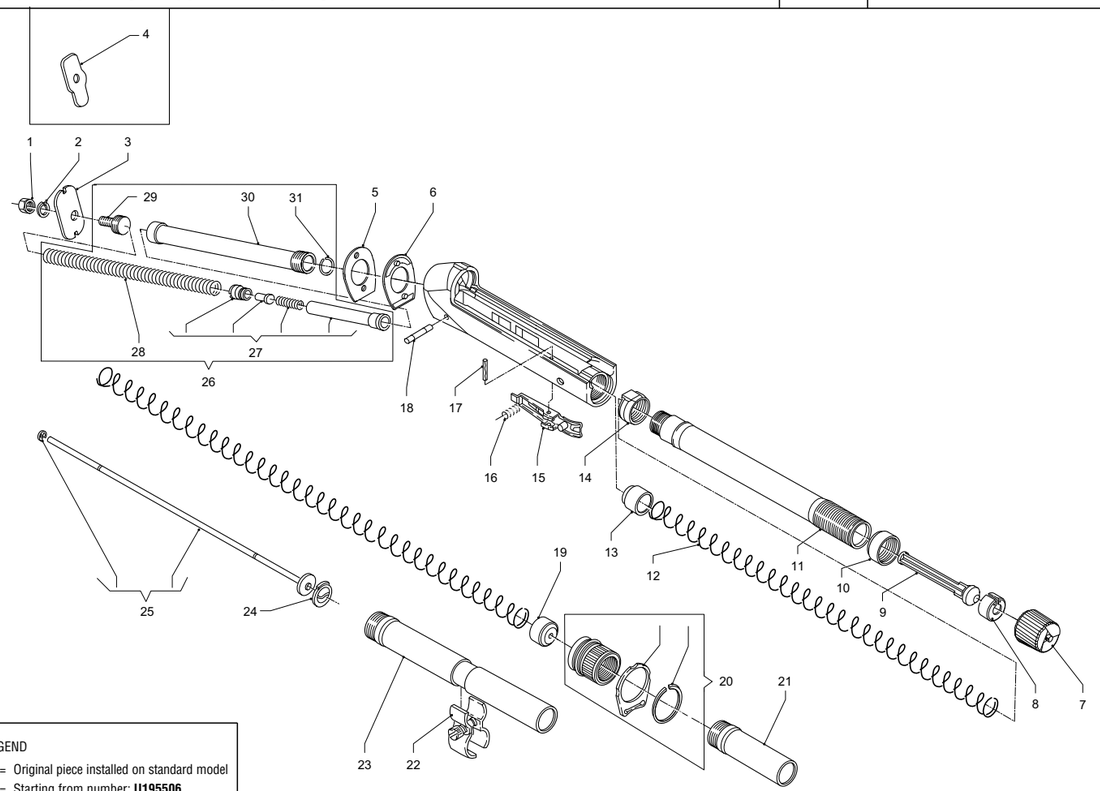

LEGEND
● = Original piece installed on standard model
D = Starting from number: **U195506**

03.08

No. Pos.	Código Manual	Código Proveedor	Descripción	P. Neto €	SUPER BLACK EAGLE				SUPER BLACK EAGLE II				
					Super Black Eagle	Camo	Left Hand	Left Hand Camo	Super Black Eagle II	Camo	Rigato	Left Hand	Left Hand Camo
1	053A	90006000	Stock retaining nut		●	●	●	●	●	●	●	●	●
2	052A	90004800	Elastic washer		●	●	●	●	●	●	●	●	●
3	150W	G0187600	Stock locking plate, drop 45/60 R.H./L.H. (steel)						●	●	●	●	●
3	150W	G0187500	Stock locking plate, drop 50/55 R.H./L.H. (steel)						●	●	●	●	●
4	150B	G0026601	Stock locking plate, drop 50 (steel)		●	●	●	●					
4	150B	G0027001	Stock locking plate, drop 55 (steel)		●	●	●	●					
4	150B	G0027401	Stock locking plate, drop 60 (steel)		●	●	●	●					
4	150B	G0027801	Stock locking plate, drop 64 (steel)		●	●	●	●					
5	286G	G0204700	Cast change shim						●	●	●	●	●
6	147L	G0078600	Drop change shim 50 (synthetic)		●	●	●	●					
6	147L	G0078700	Drop change shim 55 (synthetic)		●	●	●	●					
6	147L	G0078800	Drop change shim 60 (synthetic)		●	●	●	●					
6	147L	G0078900	Drop change shim 64 (synthetic)		●	●	●	●					
6	147Y	G0204600	Drop change shim 45 (synthetic)						●	●	●	●	●
6	147Y	G0136300	Drop change shim 50 (synthetic)						●	●	●	●	●
6	147Y	G0136400	Drop change shim 55 (synthetic)						●	●	●	●	●
6	147Y	G0136500	Drop change shim 60 (synthetic)						●	●	●	●	●
7	146C	F0005801	Fore-end follower, short tube		●		●						
7	146C	F0047402	Fore-end follower, short tube Camo TMB			●		●					
7	146G	F0110200	Fore-end follower, short tube						●		●	●	
7	146G	F0114100	Fore-end follower, short tube Camo MAX4							●			●
7	146G	F0110800	Fore-end follower, short tube Camo TMB							●			●
8	132G	G0008900	Magazine spring seal ring - short tube		●	●	●	●	●	●	●	●	●
9	158C	G0135100	Three round limiter for short tube		●	●	●	●	●	●	●	●	●
10	131G	G0008600	Lug stop ring		●	●	●	●	●	●	●	●	●
11	066G	F0036200	Magazine tube, short		●	●	●	●	●	●	●	●	●
12	064A	G0033402	Magazine spring, short		●	●	●	●	●	●	●	●	●
12	064C	G0033600	Magazine spring, long		●	●	●	●	●	●		●	●
13	065G	G0231201	Magazine follower		●	●	●	●	●	●	●	●	●
14	133G	G0009202	Fore-end slide bushing		●	●	●	●	●	●	●	●	●
15	057G	G0014101	Carrier latch		●	●	●	●	●	●	●	●	●
16	058J	G0126200	Carrier latch spring		●	●	●	●	●	●	●	●	●

SUPER BLACK EAGLE - SUPER BLACK EAGLE II

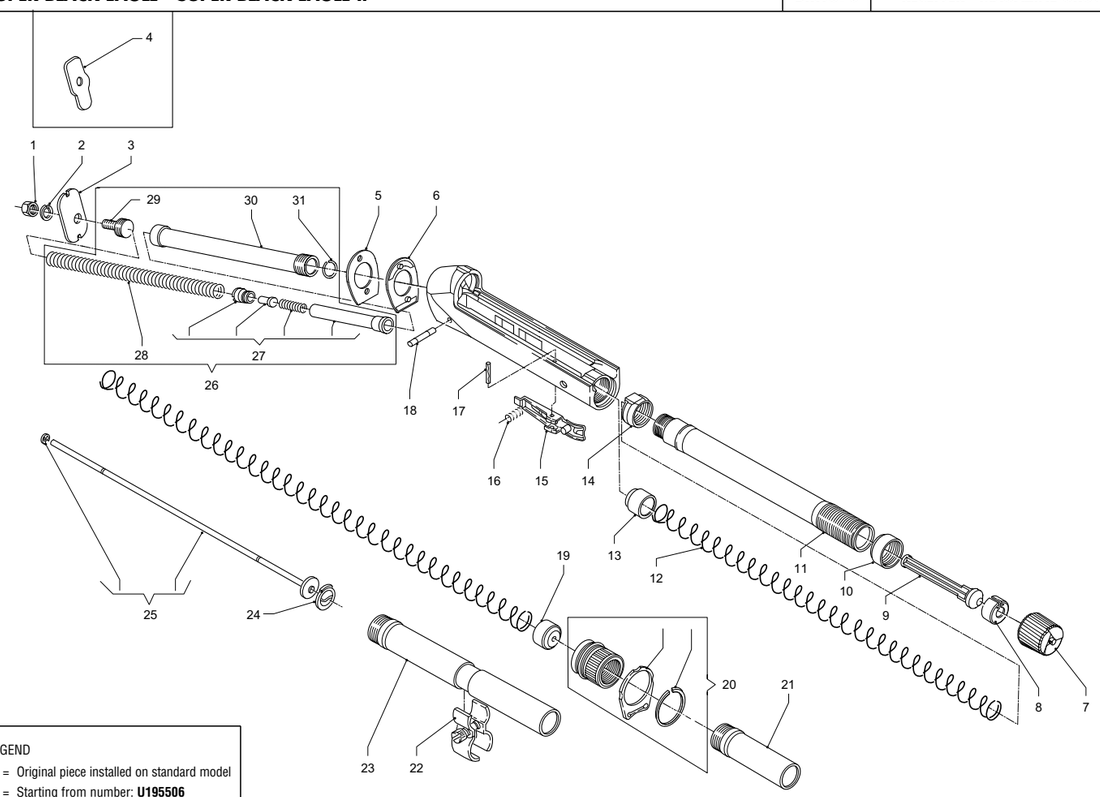

LEGEND
● = Original piece installed on standard model
D = Starting from number: **U195506**

03.10

No. Pos.	Código Manual	Código Proveedor	Descripción	P. Neto €	SUPER BLACK EAGLE				SUPER BLACK EAGLE II				
					Super Black Eagle	Camo	Left Hand	Left Hand Camo	Super Black Eagle II	Camo	Rigato	Left Hand	Left Hand Camo
17	056B	90002800	Carrier latch pin		●	●	●	●	●	●	●	●	●
18	015A	G0030701	Trigger guard pin		●	●	●	●	●	●	●	●	●
19	068C	G0062300	Magazine tube plug		●	●	●	●	●	●	●	●	●
20	069C	F0005901	Fore-end follower, long tube		●		●		●			●	
21	145C	F0093900	Magazine tube extension kit, short (see accessories)		●		●		●			●	
21	145C	F0159900	Magazine tube extension kit, short Camo APG (see accessories)			●		●		●			●
21	145C	F0048802	Magazine tube extension kit, short Camo TMB (see accessories)			●		●		●			●
22	241C	F0056800	Ring assembly for joining barrel/magazine		●		●		●			●	
22	241C	F0056900	Ring assembly for joining barrel/magazine								●		
22	241C	F0136800	Ring assembly for joining barrel/magazine Camo MAX4			●		●		●			●
22	241C	F0159700	Ring assembly for joining barrel/magazine Camo APG			●		●		●			●
22	241C	F0057201	Ring assembly for joining barrel/magazine Camo TMB			●		●		●			●
23	144C	F0039701	Magazine tube extension kit, long (see accessories)		●		●		●			●	
23	144C	F0137100	Magazine tube extension kit, long Camo MAX4 (see accessories)			●		●		●			●
23	144C	F0159800	Magazine tube extension kit, long Camo APG (see accessories)			●		●		●			●
23	144C	F0097601	Magazine tube extension kit, long Camo TMB (see accessories)			●		●		●			●
24	086C	G0055200	Limiter retaining ring		●	●	●	●	●	●	●	●	●
25	085C	F0009000	Two round limiter, long magazine		●	●	●	●	●	●	●	●	●
25	085C	F0009101	Three round limiter, long magazine		●	●	●	●	●	●	●	●	●
26	166G	F0111501	Recoil spring tube assembly						●	●	●	●	●
27	190G	F0111400	Light load assembly		●	●	●	●	●	●	●	●	●
28	054G	G0217900	Recoil spring		●	●	●	●	●	●	●	●	●
29	050B	F0111300	Stock retaining nut screw		●	●	●	●					
29	050B	F0111301	Stock retaining nut screw						●	●	●	●	●
30	049B	G0017901	Recoil spring tube		●	●	●	●					
30	049D	F0084601	Recoil spring tube						●D	●D	●D	●D	●D
31	183L	G0079800	Snap ring						●	●	●	●	●

SUPER BLACK EAGLE - SUPER BLACK EAGLE II

SUPER BLACK EAGLE - SUPER BLACK EAGLE II | DRWG. 4 | STOCK AND FORE-END GROUP

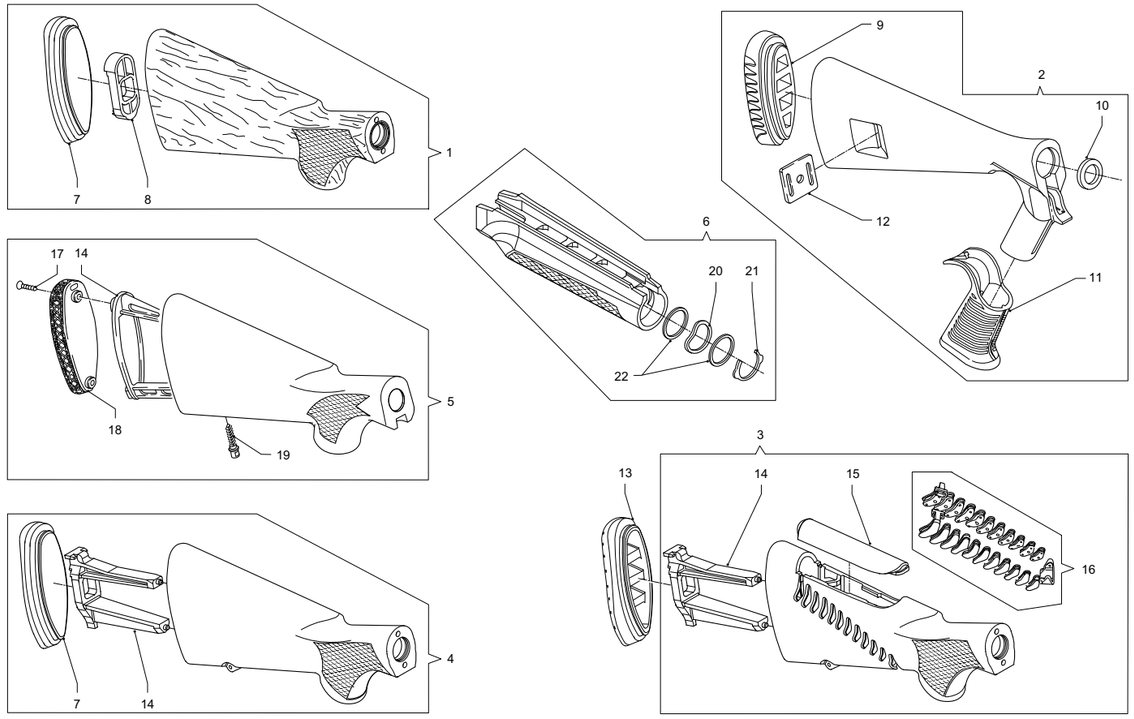

LEGEND
● = Original piece installed on standard model

03.12

No. Pos.	Código Manual	Código Proveedor	Descripción	P. Neto €	SUPER BLACK EAGLE				SUPER BLACK EAGLE II																
					Super Black Eagle	Camo	Left Hand	Left Hand Camo	Super Black Eagle II	Camo	Rigato	Left Hand	Left Hand Camo												
1	177G	F0052800	Wood stock GR1 VER (rubber butt plate)		●																				
1	177G	G0217500	Wood stock GR1 VER (rubber butt plate)						●		●														
2	160C	F0135001	Stock synthetic Pistol Grip						●		●	●													
2	160C	F0157900	Stock synthetic Pistol Grip Camo APG							●			●												
2	160C	F0139501	Stock synthetic Pistol Grip Camo TMB							●			●												
3	159G	F0108801	Stock Comfort (without butt plate)						●			●													
3	159G	F0117400	Stock Comfort Camo MAX4 (without butt plate)							●			●												
3	159G	F0157501	Stock Comfort Camo APG (without butt plate)							●			●												
3	159G	F0110500	Stock Comfort Camo TMB (without butt plate)							●			●												
4	159C	F0129800	Stock synthetic, variable drop stop (rubber butt plate)						●		●														
4	159C	F0161100	Stock synthetic, variable drop stop Camo APG (rubber butt plate)							●			●												
4	159C	F0129900	Stock synthetic, variable drop stop Camo MAX4 (rubber butt plate)							●			●												
4	159C	F0132200	Stock synthetic, variable drop stop Camo TMB (rubber butt plate)							●			●												
5	159C	F0016600	Stock synthetic, variable drop stop (rubber butt plate)		●		●																		
5	159C	F0047701	Stock synthetic, variable drop stop Camo TMB (rubber butt plate)			●		●																	
6	169G	F0110900	Fore-end, synthetic		●		●		●			●													
6	169G	F0111000	Fore-end, synthetic								●														
6	169G	F0157700	Fore-end, synthetic Camo APG			●		●																	
6	169G	F0114000	Fore-end, synthetic Camo MAX4							●			●												
6	169G	F0047802	Fore-end, synthetic Camo TMB			●		●																	
6	169G	F0111100	Fore-end, synthetic Camo TMB							●			●												
6	174G	F0013701	Wood fore-end, GR1 VER		●		●																		
6	174G	F0109500	Wood fore-end, GR1 VER						●																
6	174G	F0110400	Wood fore-end, GR1 VER								●														
7	394G	G0222900	Rubber butt plate						●		●														
8	149Y	G0204801	Wood stock spacer						●		●														
9	151T	G0138600	Rubber butt plate for Pistol Grip stock						●	●	●														
10	075C	G0024502	Stock ring Pistol Grip						●	●	●														
11	083C	G0026200	Grip						●	●	●														
12	063C	G0028200	Sling swivel plate						●	●	●														
13	387B	G0228600	Gel recoil pad, high R.H. 35 mm.						●	●	●														
13	387B	G0256200	Gel recoil pad, low R.H. 15 mm.						●	●	●														

SUPER BLACK EAGLE - SUPER BLACK EAGLE II

SUPER BLACK EAGLE - SUPER BLACK EAGLE II | DRWG. 4 | STOCK AND FORE-END GROUP

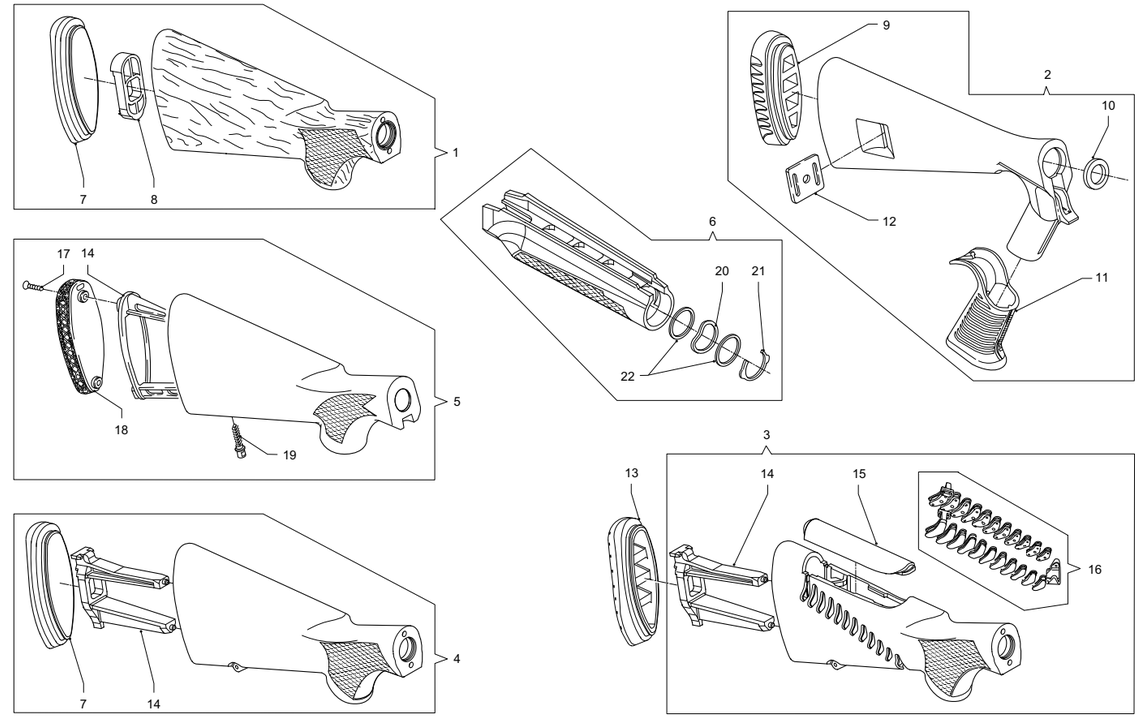

LEGEND
● = Original piece installed on standard model

03.14

No. Pos.	Código Manual	Código Proveedor	Descripción	P. Neto €	SUPER BLACK EAGLE				SUPER BLACK EAGLE II																
					Super Black Eagle	Camo	Left Hand	Left Hand Camo	Super Black Eagle II	Camo	Rigato	Left Hand	Left Hand Camo												
13	387B	G0216401	Gel recoil pad, medium R.H. 25 mm.						●	●	●														
13	387E	G0232400	Gel recoil pad, high L.H. 35 mm.									●	●												
13	387E	G0257800	Gel recoil pad, low L.H. 15 mm.									●	●												
13	387E	G0216500	Gel recoil pad, medium L.H. 25 mm.									●	●												
14	149C	G0026300	Stock spacer		●	●	●	●																	
14	149C	G0215500	Stock spacer						●	●	●	●	●												
15	380G	G0256100	Gel comb, high R.H.						●	●	●														
15	380G	G0215700	Gel comb, low R.H.						●	●	●	●	●												
15	380G	G0233100	Gel comb, medium R.H.						●	●	●	●	●												
15	380M	G0295700	Gel comb, high L.H.									●	●												
16	379G	F0108700	Chevrons assembly						●	●	●	●	●												
17	062A	90007600	Threaded wood screw		●	●	●	●																	
18	151C	G0025900	Rubber butt plate		●	●	●	●																	
19	152C	G0028800	Removable sling swivel screw		●		●																		
20	135G	G0016500	Spring washer		●	●	●	●	●	●	●	●	●												
21	136G	G0008800	Elastic ring		●	●	●	●	●	●	●	●	●												
22	134G	G0016600	Washer		●	●	●	●	●	●	●	●	●												
–	193G	G0095300	SBE shield		●		●																		
–	194L	G0093500	Shield support		●		●																		

SUPER BLACK EAGLE - SUPER BLACK EAGLE II

SUPER BLACK EAGLE - SUPER BLACK EAGLE II	DRWG. 5	BARREL GROUP

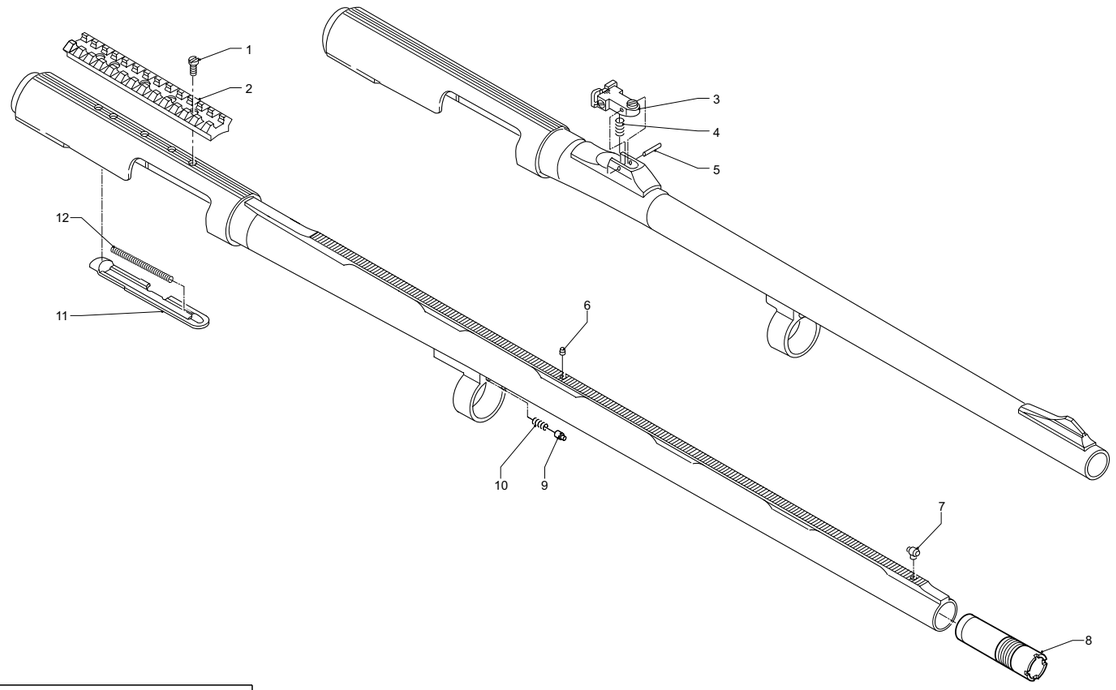

LEGEND
● = Original piece installed on standard model

03.16

No. Pos.	Código Manual	Código Proveedor	Descripción	P. Neto €	SUPER BLACK EAGLE				SUPER BLACK EAGLE II				
					Super Black Eagle	Camo	Left Hand	Left Hand Camo	Super Black Eagle II	Camo	Rigato	Left Hand	Left Hand Camo
1	128S	G0298000	Rail screw						●	●	●	●	●
2	260N	G0131400	Telescope guide (see accessories)						●	●	●	●	●
3	127N	F0027000	Rear sight								●		
4	259N	G0063700	Rear sight spring								●		
5	035A	90003100	Rear sight fixing pin								●		
6	153A	G0021500	Intermediate sight		●	●	●	●	●	●		●	●
7	044B	G0020900	Fluorescent front sight		●	●	●	●	●	●		●	●
8	213G	–	nternal choke (see accessories)										
9	074C	90000900	Cap retaining ball		●	●	●	●					
9	074J	G0122800	Cap retaining ball						●	●	●	●	●
10	073C	G0032000	Cap retaining ball spring		●	●	●	●					
10	073J	G0128200	Cap retaining ball spring						●	●	●	●	●
11	045H	G0175500	Ejector frame		●	●			●	●	●		
11	045M	G0120000	Ejector frame				●	●				●	●
11	130G	G0019201	Ejector frame		●	●							
12	046M	G0122600	Ejector spring		●	●	●	●	●	●	●	●	●
–	047G	G0024400	Ejector frame screw		●	●							

SUPER BLACK EAGLE - SUPER BLACK EAGLE II

04

M1	M2
M1	M2
CAMO	CAMO
TACTICAL	TACTICAL
PRACTICAL	PRACTICAL
M1 LEFT HAND	RIGATO
M1 20	M2 LEFT HAND
	M2 LEFT HAND CAMO
	M2 20
	M2 CAMO 20

04.01

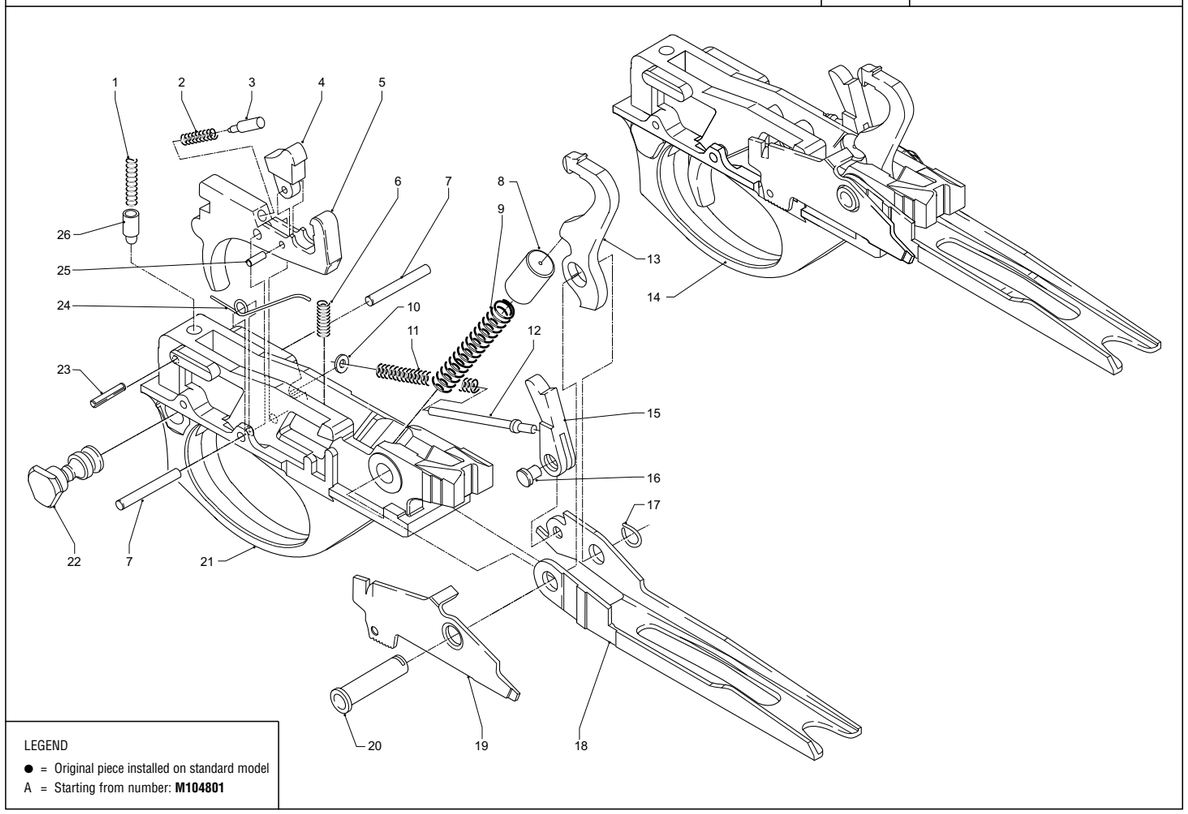

LEGEND
● = Original piece installed on standard model
A = Starting from number: **M104801**

04.02

No. Pos.	Código Manual	Código Proveedor	Descripción	P. Neto €	M1						M2														
					M1	Camo	Tactical	Practical	M1 Left Hand	M1 20	M2	Camo	Tactical	Practical	Rigato	M2 Left Hand	M2 Left Hand Camo	M2 20	M2 Camo 20						
1	007A	G0032001	Safety plunger spring		●	●	●	●	●	●	●	●	●	●	●	●	●	●	●						
2	277J	G0128500	Disconnector spring		●	●	●	●	●	●	●	●	●	●	●	●	●	●	●						
3	045J	G0089101	Disconnector pin		●	●	●	●	●	●	●	●	●	●	●	●	●	●	●						
4	005C	G0001200	Disconnector hammer (blued)		●	●	●	●	●	●	●	●	●	●	●	●	●	●	●						
5	009C	G0002303	Trigger (blued)		●A	●	●	●	●A	●	●	●	●	●	●	●	●	●	●						
6	011J	G0124000	Trigger spring		●	●	●	●	●	●	●	●	●	●	●	●	●	●	●						
7	010L	90008800	Trigger pin		●	●	●	●	●	●	●	●	●	●	●	●	●	●	●						
8	003A	G0000101	Hammer spring cap		●	●	●	●	●	●	●	●	●	●	●	●	●	●	●						
9	004A	G0218200	Hammer spring		●	●	●	●	●	●	●	●	●	●	●	●	●	●	●						
10	243F	90010200	Washer								●	●	●	●	●	●	●	●	●						
11	021A	G0032100	Carrier spring							●								●	●						
11	021J	G0124200	Carrier spring		●	●	●	●	●		●	●	●	●	●	●	●								
12	022A	G0004301	Bolt latch pin		●	●	●	●	●	●	●	●	●	●	●	●	●	●	●						
13	002B	G0001000	Hammer		●A	●	●	●	●A	●	●	●	●	●	●	●	●	●	●						
14	001C	F0051500	Trigger group assembly, blued		●	●	●	●																	
14	001C	F0107700	Trigger group assembly, blued								●	●	●	●	●										
14	001G	F0111800	Trigger group assembly, blued													●	●								
14	001R	F0060000	Trigger group assembly, blued						●																
14	001U	F0061900	Trigger group assembly, blued							●															
14	001U	F0148500	Trigger group assembly, blued															●	●						
15	019A	G0001400	Bolt stop tooth		●	●	●	●	●		●	●	●	●	●	●	●								
15	019D	G0224900	Bolt stop tooth							●								●	●						
16	020A	G0003900	Bolt stop tooth pin		●	●	●	●	●	●	●	●	●	●	●	●	●	●	●						
17	018A	G0032300	Trigger guard pin spring		●	●	●	●	●	●	●	●	●	●	●	●	●	●	●						
18	017C	G0001501	Carrier		●	●	●	●			●	●	●	●	●										
18	017R	G0130900	Carrier						●							●	●								
18	017U	G0106100	Carrier							●								●	●						
19	076D	G0003600	Cartridge drop lever							●								●	●						
19	076L	G0076600	Cartridge drop lever		●	●	●	●	●		●	●	●	●	●	●	●								
20	016D	G0000600	Trigger pin bush							●								●	●						
20	016J	G0089900	Trigger pin bush		●	●	●	●	●		●	●	●	●	●	●	●								
21	014B	G0002702	Trigger guard		●	●	●	●	●																

M1 - M2

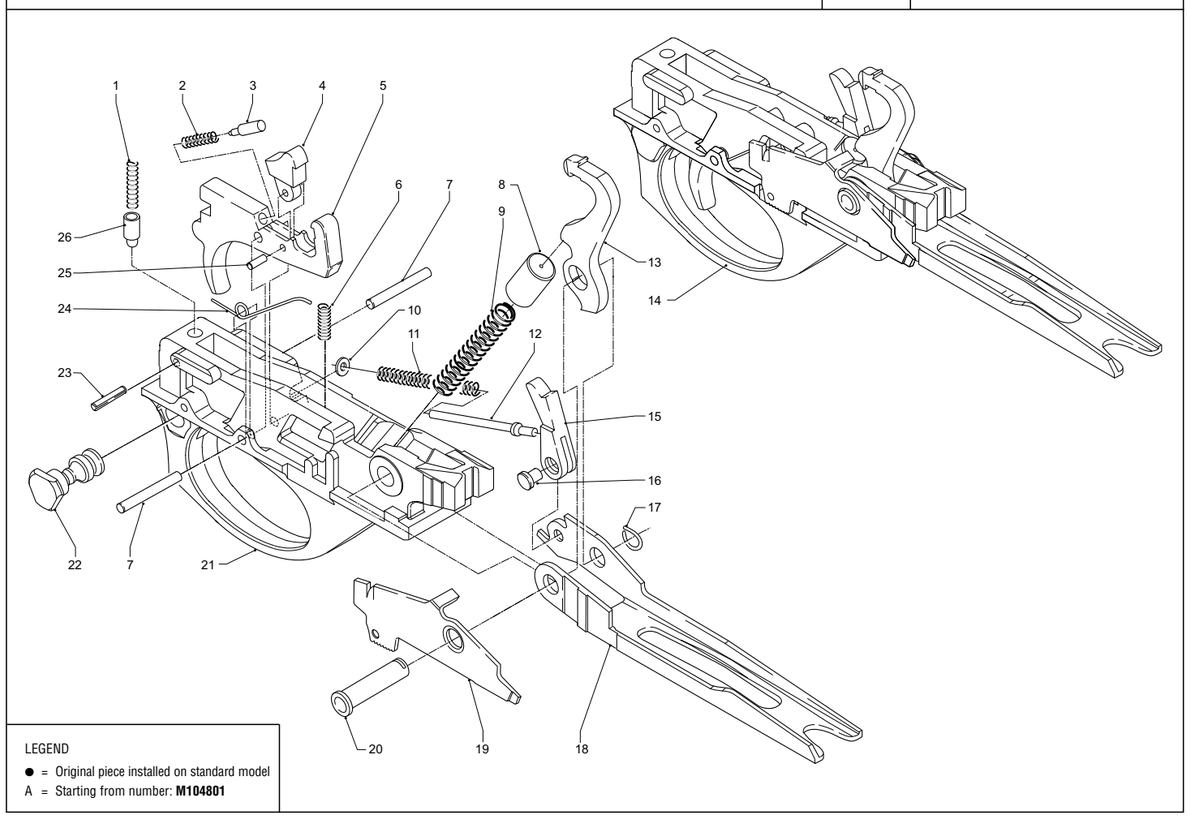

LEGEND
● = Original piece installed on standard model
A = Starting from number: **M104801**

04.04

No. Pos.	Código Manual	Código Proveedor	Descripción	P. Neto €	M1						M2														
					M1	Camo	Tactical	Practical	M1 Left Hand	M1 20	M2	Camo	Tactical	Practical	Rigato	M2 Left Hand	M2 Left Hand Camo	M2 20	M2 Camo 20						
21	014B	G0208000	Trigger guard								●	●	●	●	●	●	●								
21	014D	G0003001	Trigger guard							●															
21	014D	G0244100	Trigger guard															●	●						
22	013J	G0123800	Hand safety button		●	●	●	●	●	●	●	●	●	●	●	●	●	●	●						
23	012A	90003200	Safety spring retaining pin		●	●	●	●	●	●	●	●	●	●	●	●	●	●	●						
24	077B	G0032800	Cartridge drop lever spring		●	●	●	●	●	●	●	●	●	●	●	●	●	●	●						
25	023A	G0004001	Disconnector pin		●	●	●	●	●	●	●	●	●	●	●	●	●	●	●						
26	008A	G0054200	Hand safety plunger		●	●	●	●	●	●	●	●	●	●	●	●	●	●	●						

M1 - M2

M1 - M2 | DRWG. 2 | BOLT GROUP

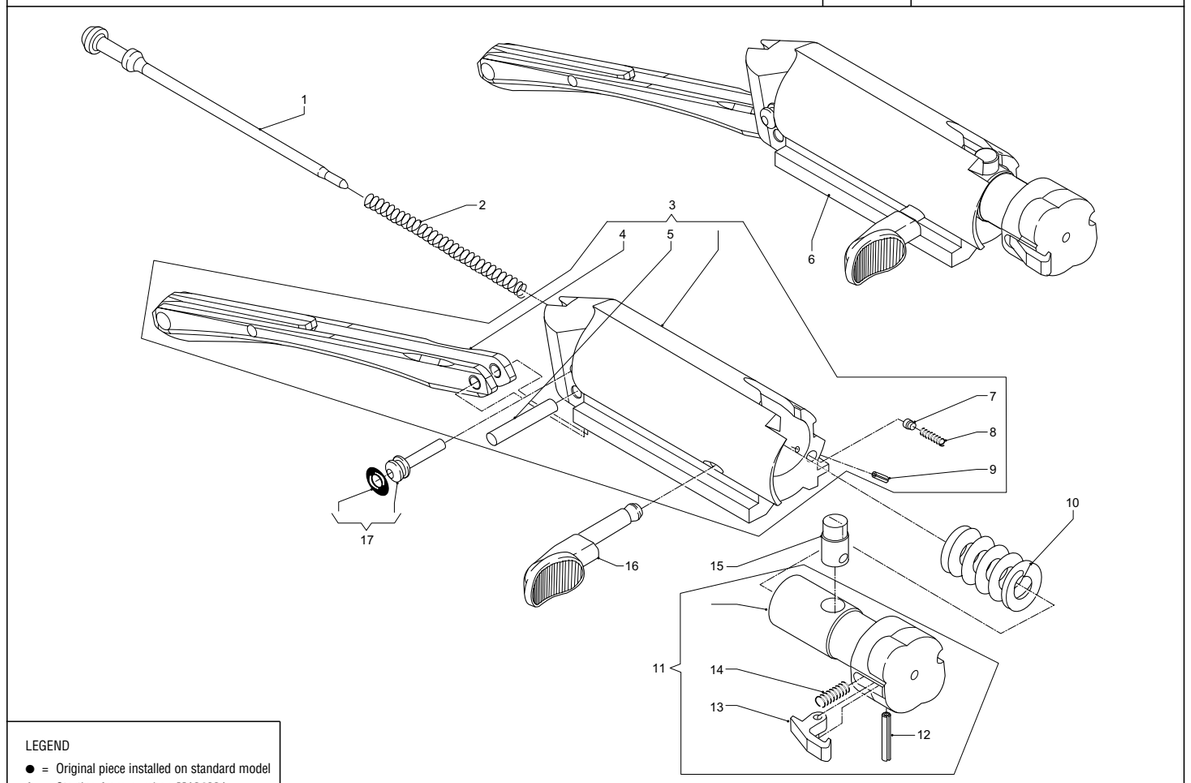

LEGEND
● = Original piece installed on standard model
A = Starting from number: **M104801**

No. Pos.	Código Manual	Código Proveedor	Descripción	P. Neto €	M1						M2								
					M1	Camo	Tactical	Practical	M1 Left Hand	M1 20	M2	Camo	Tactical	Practical	Rigato	M2 Left Hand	M2 Left Hand Camo	M2 20	M2 Camo 20
1	025B	G0007301	Firing pin		●A	●	●	●	●A	●	●	●	●	●	●	●	●	●	●
2	037A	G0033101	Firing pin spring		●	●	●	●	●	●	●	●	●	●	●	●	●	●	●
3	026C	F0003600	Bolt, partial		●	●	●	●			●	●	●	●	●				
3	026M	F0060200	Bolt, partial						●							●	●		
3	026U	F0062000	Bolt, partial							●								●	●
4	027L	G0079100	Link		●	●	●	●	●	●	●	●	●	●	●	●	●	●	●
5	029D	G0257700	Link pin							●								●	●
5	029J	G0091400	Link pin		●	●	●	●	●		●	●	●	●	●	●	●		
6	024C	F0002500	Bolt group		●	●	●				●	●	●		●				
6	024C	F0051400	Bolt group					●						●					
6	024R	F0060400	Bolt group						●							●	●		
6	024U	F0061800	Bolt group							●								●	●
7	039A	G0007500	Bolt handle pin		●	●	●	●	●	●	●	●	●	●	●	●	●	●	●
8	038J	G0126800	Bolt handle retaining spring		●	●	●	●	●	●	●	●	●	●	●	●	●	●	●
9	040A	90021600	Bolt handle spring retaining pin		●	●	●	●	●	●	●	●	●	●	●	●	●	●	●
10	036A	G0032901	Inertia spring		●	●	●	●	●		●	●	●	●	●	●	●		
10	036D	G0033300	Inertia spring							●								●	●
11	165A	F0004601	Locking head assembly		●	●	●	●			●	●	●	●	●				
11	165D	F0004900	Locking head assembly							●								●	●
11	165E	F0004701	Locking head assembly						●							●	●		
12	035A	90003100	Extractor pin		●	●	●	●	●		●	●	●	●	●	●	●		
12	035D	90003200	Extractor pin							●								●	●
13	034A	G0004901	Extractor		●	●	●	●		●	●	●	●	●	●			●	●
13	034E	G0005000	Extractor						●							●	●		
14	033J	G0126900	Extractor spring		●	●	●	●	●	●	●	●	●	●	●	●	●	●	●
15	031B	G0007900	Locking head pin		●	●	●	●			●	●	●	●	●				
15	031D	G0008100	Locking head pin							●								●	●
15	031E	G0007800	Locking head pin						●							●	●		
16	030C	G0005301	Bolt handle, blued		●	●	●		●		●	●	●		●	●	●		
16	030C	G0106900	Bolt handle, round blued					●						●					
16	030U	G0134200	Bolt handle, blued							●								●	●
17	028A	F0004501	Firing pin retaining pin		●	●	●	●	●	●	●	●	●	●	●	●	●	●	●

M1 - M2

M1 - M2 | DRWG. 3 | RECEIVER - MAGAZINE GROUP

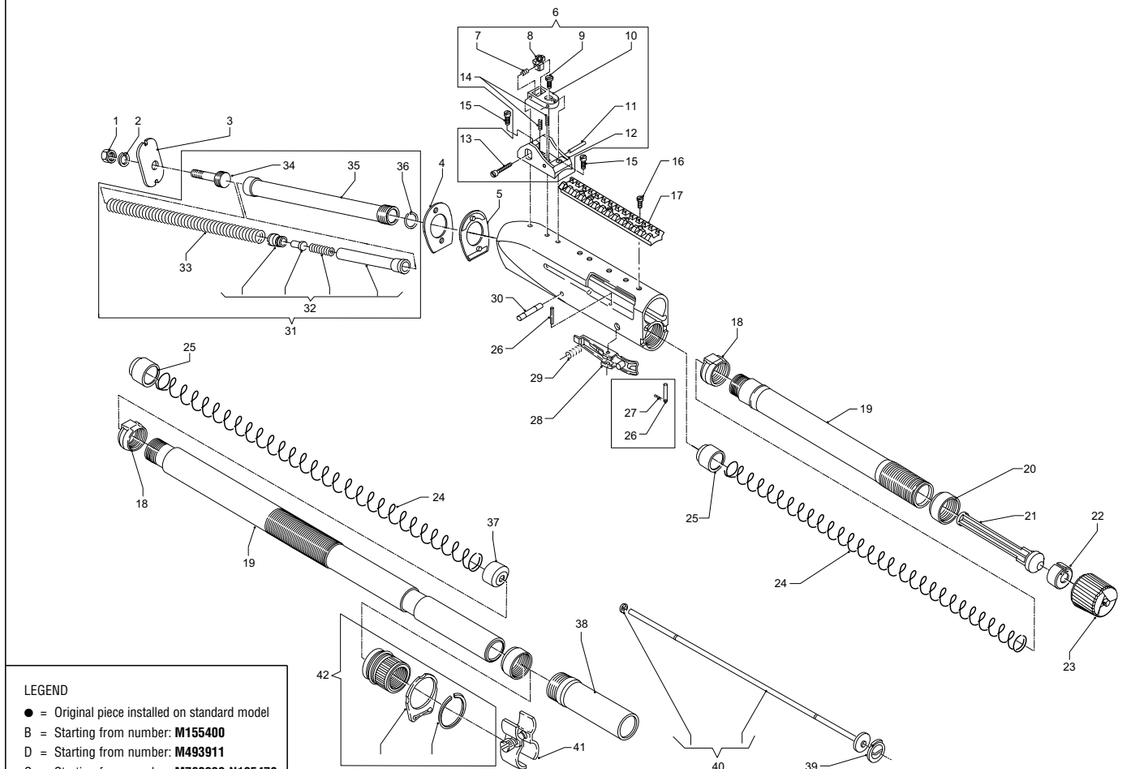

LEGEND
● = Original piece installed on standard model
B = Starting from number: **M155400**
D = Starting from number: **M493911**
G = Starting from number: **M760229-N125478**

No. Pos.	Código Manual	Código Proveedor	Descripción	P. Neto €	M1						M2								
					M1	Camo	Tactical	Practical	M1 Left Hand	M1 20	M2	Camo	Tactical	Practical	Rigato	M2 Left Hand	M2 Left Hand Camo	M2 20	M2 Camo 20
1	053A	90006000	Stock retaining nut		●	●	●	●	●	●	●	●	●	●	●	●	●	●	●
2	052A	90004800	Elastic washer		●	●	●	●	●	●	●	●	●	●	●	●	●	●	●
3	150B	G0026601	Stock locking plate, drop 50 (steel)		●	●	●	●	●	●									
3	150B	G0027001	Stock locking plate, drop 55 (steel)		●	●	●	●	●	●									
3	150B	G0027401	Stock locking plate, drop 60 (steel)		●	●	●	●	●	●									
3	150B	G0027801	Stock locking plate, drop 64 (steel)		●	●	●	●	●	●									
3	150W	G0187600	Stock locking plate, drop 45/60 R.H./L.H. (steel)								●	●	●	●	●	●	●	●	●
3	150W	G0187500	Stock locking plate, drop 50/55 R.H./L.H. (steel)								●	●	●	●	●	●	●	●	●
3	150W	G0240900	Stock locking plate, drop 64 R.H./L.H. (steel)								●	●	●	●	●	●	●	●	●
4	286D	G0234700	Stock change shim															●	●
4	286G	G0204700	Stock change shim								●	●	●	●	●	●	●		
5	147B	G0078600	Drop change shim 50 (synthetic)		●	●	●	●	●										
5	147B	G0078700	Drop change shim 55 (synthetic)		●	●	●	●	●										
5	147B	G0078800	Drop change shim 60 (synthetic)		●	●	●	●	●										
5	147B	G0078900	Drop change shim 64 (synthetic)		●	●	●	●	●										
5	147D	G0234800	Drop change shim 45 (synthetic)															●	●
5	147D	G0026801	Drop change shim 50 (synthetic)							●									
5	147D	G0234900	Drop change shim 50 (synthetic)															●	●
5	147D	G0027201	Drop change shim 55 (synthetic)							●									
5	147D	G0235000	Drop change shim 55 (synthetic)															●	●
5	147D	G0027601	Drop change shim 60 (synthetic)							●									
5	147D	G0235100	Drop change shim 60 (synthetic)															●	●
5	147D	G0028001	Drop change shim 64 (synthetic)							●									
5	147D	G0235200	Drop change shim 64 (synthetic)															●	●
5	147Y	G0204600	Drop change shim 45 (synthetic)								●	●	●	●	●	●	●		
5	147Y	G0136300	Drop change shim 50 (synthetic)								●	●	●	●	●	●	●		
5	147Y	G0136400	Drop change shim 55 (synthetic)								●	●	●	●	●	●	●		
5	147Y	G0136500	Drop change shim 60 (synthetic)								●	●	●	●	●	●	●		
5	147Y	G0136600	Drop change shim 64 (synthetic)								●	●	●	●	●	●	●		
6	127C	F0049600	Rear sight assembly, blued				●						●	●					
7	258C	G0104600	Windage spring										●	●					
8	253C	G0104000	Rear sight aperture										●	●					

M1 - M2

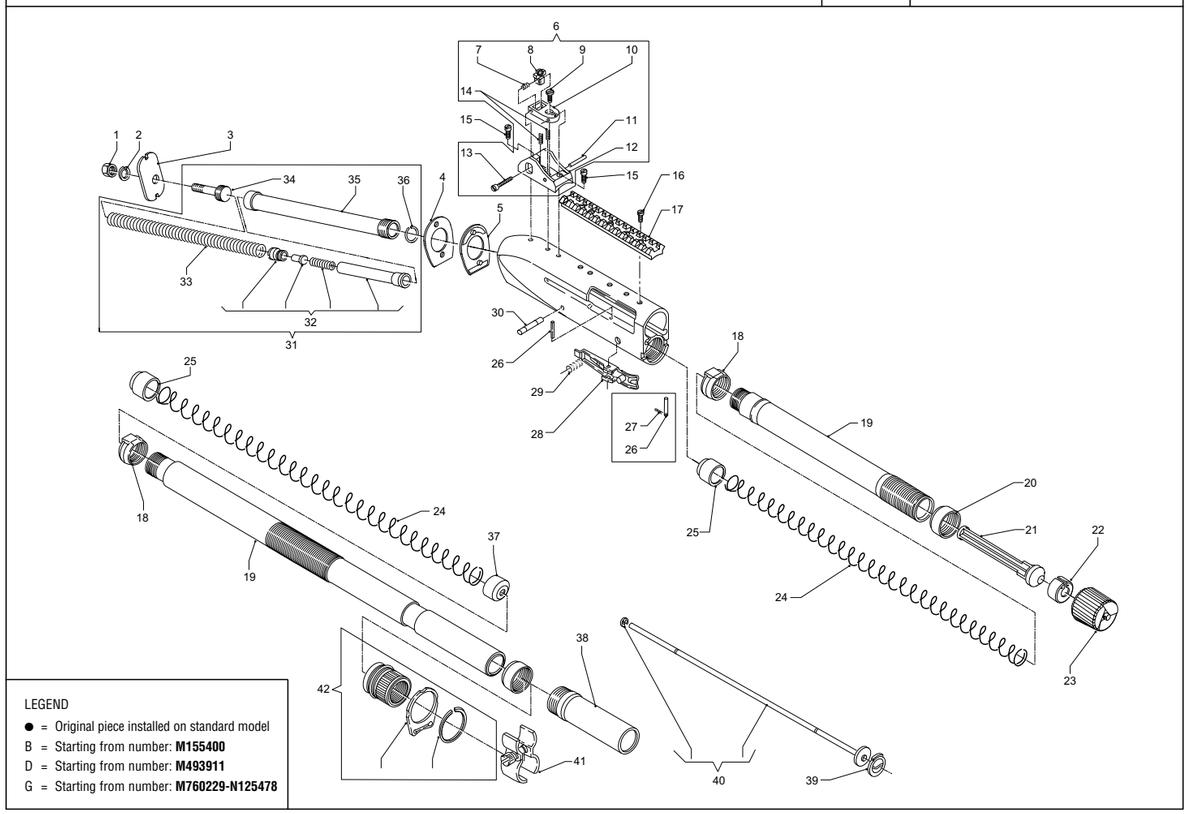

04.10

No. Pos.	Código Manual	Código Proveedor	Descripción	P. Neto €	M1						M2															
					M1	Camo	Tactical	Practical	M1 Left Hand	M1 20	M2	Camo	Tactical	Practical	Rigato	M2 Left Hand	M2 Left Hand Camo	M2 20	M2 Camo 20							
9	255C	G0104400	Elevation adjustment screw										●	●												
10	254C	G0104100	Rear sight support										●	●												
11	257C	G0104500	Sight pin										●	●												
12	126C	G0104200	Rear sight protection guard										●	●												
13	256C	G0104400	Windage adjustment screw										●	●												
14	259C	G0104700	Elevation spring										●	●												
15	128C	G0105400	Rear sight fixing screw, blued				●	●					●	●												
16	128S	G0298000	Rail screw				●	●					●	●	●											
17	260N	G0131400	Telescope guide (see accessories)				●	●					●	●	●											
18	133G	G0009202	Fore-end slide bushing		●B	●	●	●	●B		●	●	●	●	●	●	●									
18	–	G0166300	Fore-end slide bushing							●								●	●							
19	066C	F0010100	Magazine tube, long		●																					
19	066C	F0036100	Magazine tube, long		●B		●				●		●													
19	066G	F0036200	Magazine tube, short		●B	●			●B		●	●	●	●	●	●	●									
19	066U	G0139200	Magazine tube, short							●								●	●							
20	131G	G0008600	Lug stop ring		●	●	●	●	●		●	●	●	●	●	●	●									
21	158C	G0135100	Three round limiter, short magazine		●	●			●		●	●			●	●	●									
21	158U	G0139500	Three round limiter, short magazine							●								●	●							
22	132G	G0008900	Magazine spring seal ring		●	●			●		●	●			●	●	●									
22	132T	G0138900	Magazine spring seal ring							●								●	●							
23	146C	F0005801	Fore-end follower, short magazine		●				●																	
23	146C	F0047402	Fore-end follower, short magazine Camo TMB			●																				
23	146G	F0110200	Fore-end follower, short magazine								●				●	●										
23	146G	F0157600	Fore-end follower, short magazine Camo APG									●					●									
23	146G	F0114100	Fore-end follower, short magazine Camo MAX4									●					●									
23	146G	F0110800	Fore-end follower, short magazine Camo TMB									●					●									
23	146U	F0062400	Fore-end follower, short magazine							●																
23	146U	F0147600	Fore-end follower, short magazine															●								
23	146U	F0148300	Fore-end follower, short magazine Camo TMB																●							
23	–	F0318800	Sling swivel follower assembly 20 GA																●							
23	–	F0158100	Sling swivel follower assembly 20 GA Camo APG-HD																●							
24	064A	G0033402	Magazine spring, short		●	●			●		●	●			●	●	●									

M1 - M2

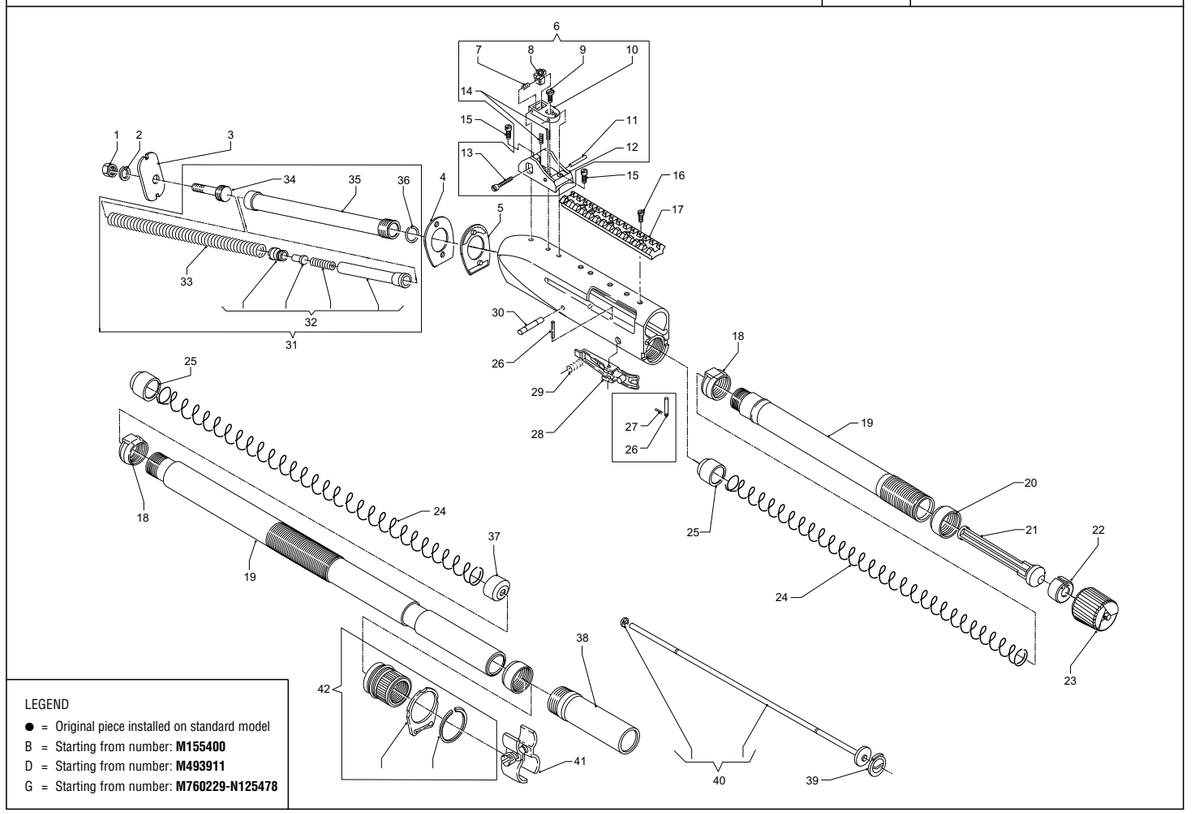

04.12

No. Pos.	Codigo Manual	Código Proveedor	Descripción	P. Neto €	M1						M2															
					M1	Camo	Tactical	Practical	M1 Left Hand	M1 20	M2	Camo	Tactical	Practical	Rigato	M2 Left Hand	M2 Left Hand Camo	M2 20	M2 Camo 20							
24	064C	G0033600	Magazine spring, long		●	●	●	●	●		●	●	●	●		●	●									
24	064D	G0047602	Magazine spring, short							●								●	●							
24	064D	G0167701	Magazine spring, long							●								●	●							
25	065D	G0474700	Magazine follower							●								●	●							
25	065G	G0231201	Magazine follower		●	●	●	●	●		●	●	●	●	●	●	●									
26	056B	90002800	Carrier latch pin		●	●	●	●		●	●	●	●	●	●			●	●							
26	156E	G0015401	Carrier latch pin						●							●	●									
27	155E	G0034000	Carrier latch pin retaining spring						●							●	●									
28	057B	G0014301	Carrier latch		●	●	●		●	●	●	●	●		●	●	●	●	●							
28	057B	G0106501	Carrier latch					●						●												
29	058J	G0126200	Carrier latch spring		●	●	●	●	●	●	●	●	●	●	●	●	●	●	●							
30	015A	G0030700	Trigger guard pin		●	●	●	●	●					●												
30	015B	G0216600	Trigger guard pin								●	●	●	●	●	●	●									
30	015D	G0030800	Trigger guard pin							●																
30	015D	G0133701	Trigger guard pin															●	●							
31	166D	F0123701	Recoil spring tube assembly							●								●	●							
31	166Y	F0111701	Recoil spring tube assembly		●D	●D	●D	●D	●D		●	●	●	●	●	●	●									
32	190D	F0123600	Light load assembly							●								●	●							
32	190Y	F0111600	Light load assembly		●	●	●	●	●		●	●	●	●	●	●	●									
33	054B	G0047501	Recoil spring							●								●	●							
33	054B	G0218100	Recoil spring		●	●	●	●	●		●	●	●	●	●	●	●									
34	050G	F0111300	Stock retaining nut screw		●	●	●	●	●	●	●	●	●	●	●	●	●	●	●							
34	050G	F0111301	Stock retaining nut screw (from reg. nr. M760229, N125478 - 20-gauge)								●G	●G	●G	●G	●G	●G	●G	●G	●G							
35	049B	G0017901	Recoil spring tube		●	●	●	●	●																	
35	049D	F0084601	Recoil spring tube		●D	●D	●D	●D	●D	●	●	●	●	●	●	●	●	●	●							
36	183L	G0079800	Snap ring		●D	●D	●D		●D	●	●	●	●	●	●	●	●	●	●							
37	068C	G0062300	Magazine tube plug		●	●	●	●	●		●	●	●	●	●	●	●									
37	068T	G0167300	Magazine tube plug							●								●	●							
38	144C	F0039701	Magazine tube extension kit, long		●				●		●					●										
38	144C	F0159800	Magazine tube extension kit, long Camo APG			●						●					●									
38	144C	F0137100	Magazine tube extension kit, long Camo MAX4			●						●					●									
38	144C	F0097601	Magazine tube extension kit, long Camo TMB			●						●					●									

M1 - M2

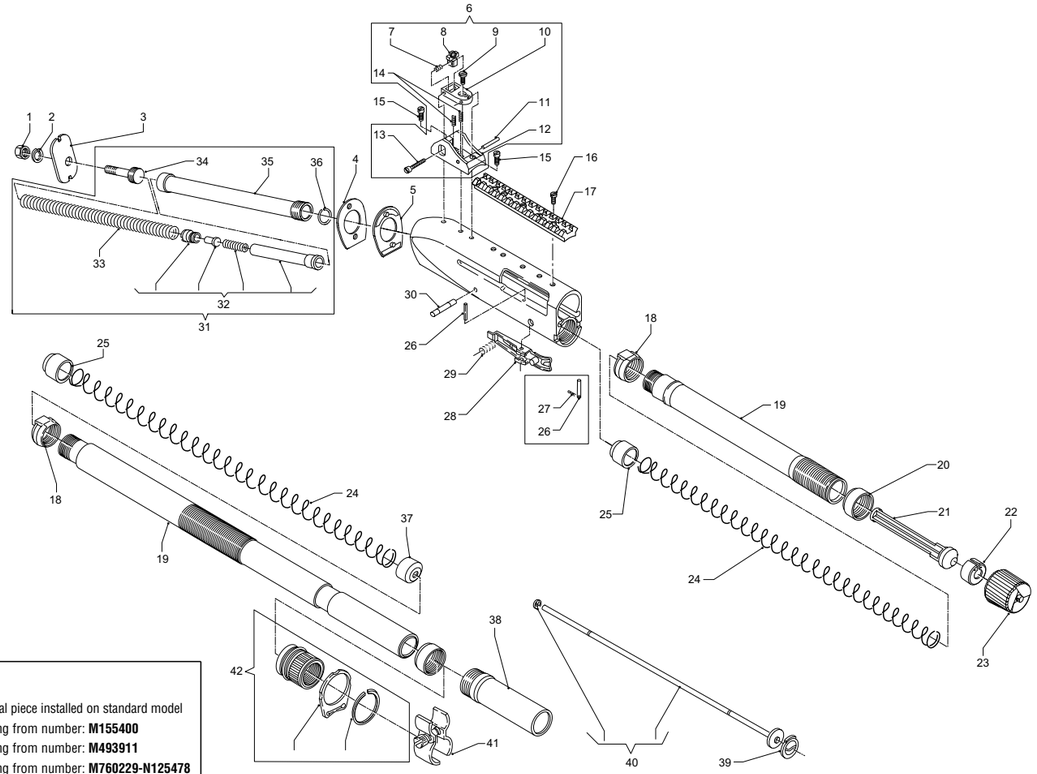

LEGEND
- ● = Original piece installed on standard model
- B = Starting from number: **M155400**
- D = Starting from number: **M493911**
- G = Starting from number: **M760229-N125478**

04.14

No. Pos.	Código Manual	Código Proveedor	Descripción	P. Neto €	M1						M2														
					M1	Camo	Tactical	Practical	M1 Left Hand	M1 20	M2	Camo	Tactical	Practical	Rigato	M2 Left Hand	M2 Left Hand Camo	M2 20	M2 Camo 20						
38	144U	F0125700	Magazine tube extension kit, long							●								●							
38	145C	F0093900	Magazine tube extension kit, short (see accessories)		●				●		●					●									
38	145C	F0159900	Magazine tube extension kit, short Camo APG (see accessories)			●						●					●								
38	145C	F0048802	Magazine tube extension kit, short Camo TMB (see accessories)			●						●					●								
39	086C	G0055200	Limiter retaining ring		●		●		●		●		●	●		●	●								
39	–	G0249200	Limiter retaining ring							●								●	●						
40	085C	F0009000	Two round limiter, long magazine		●		●	●	●		●		●	●		●	●								
40	085C	F0051000	Three round limiter, extra-long magazine					●						●											
40	085C	F0009101	Three round limiter, long magazine		●		●	●	●		●		●	●		●	●								
40	085F	F0033100	Three round limiter, intermediate magazine				●						●												
41	241C	F0056800	Ring assembly for joining barrel/magazine		●		●		●		●		●	●		●									
41	241C	F0159700	Ring assembly for joining barrel/magazine Camo APG			●						●					●								
41	241C	F0136800	Ring assembly for joining barrel/magazine Camo MAX4									●					●								
41	241C	F0057201	Ring assembly for joining barrel/magazine Camo TMB			●						●					●								
41	241T	F0081300	Ring assembly for joining barrel/magazine							●								●							
42	069C	F0005901	Fore-end follower, long magazine		●		●	●	●		●		●	●		●									
42	069C	F0081400	Fore-end follower, long magazine							●								●							
42	069C	F0159600	Fore-end follower, long magazine Camo APG																●						
42	069C	F0136900	Fore-end follower, long magazine Camo MAX4									●					●								
42	069C	F0082100	Fore-end follower, long magazine Camo TMB																●						

M1 - M2

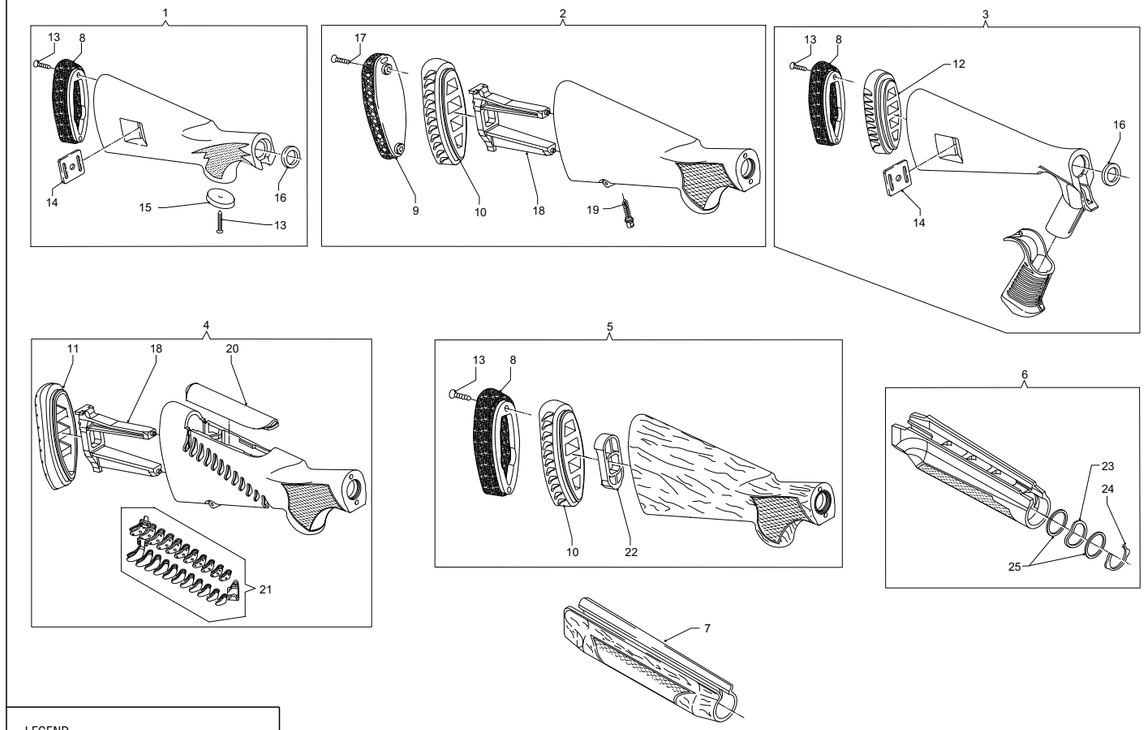

LEGEND
- ● = Original piece installed on standard model

04.16

No. Pos.	Código Manual	Código Proveedor	Descripción	P. Neto €	M1						M2														
					M1	Camo	Tactical	Practical	M1 Left Hand	M1 20	M2	Camo	Tactical	Practical	Rigato	M2 Left Hand	M2 Left Hand Camo	M2 20	M2 Camo 20						
1	161C	F0016401	Stock assembly		●		●		●																
2	159C	F0129800	Stock assembly synthetic, variable drop stop								●		●												
2	159C	F0016600	Stock assembly synthetic, variable drop stop		●		●		●																
2	159C	F0161100	Stock assembly synthetic, variable drop stop Camo APG									●													
2	159C	F0129900	Stock assembly synthetic, variable drop stop Camo MAX4									●													
2	159C	F0047701	Stock assembly synthetic, variable drop stop Camo TMB			●																			
2	159C	F0132200	Stock assembly synthetic, variable drop stop Camo TMB									●													
2	159U	F0082200	Stock assembly synthetic, variable drop stop							●															
3	160C	F0033201	Stock assembly, Pistol Grip		●		●		●																
3	160C	F0135001	Stock assembly, Pistol Grip										●												
3	160C	F0132901	Stock assembly, Pistol Grip Camo TMB									●													
4	159G	F0108801	Stock assembly Comfort, variable drop stop								●		●	●	●	●									
4	159G	F0157501	Stock assembly Comfort, variable drop stop Camo APG									●					●								
4	159G	F0113901	Stock assembly Comfort, variable drop stop Camo MAX4									●					●								
4	159G	F0110500	Stock assembly Comfort, variable drop stop Camo TMB									●					●								
4	415U	F0143801	Stock assembly Comfort, variable drop stop															●							
4	415U	F0158201	Stock assembly Comfort, variable drop stop Camo APG																●						
4	415U	F0318600	Stock assembly Comfort, variable drop stop Camo MAX4																●						
4	415U	F0148600	Stock assembly Comfort, variable drop stop Camo TMB																●						
5	177G	F0136100	Wood stock assembly								●														
6	169G	F0110900	Fore-end assembly, synthetic		●		●	●	●		●		●	●		●									
6	169G	F0111000	Fore-end assembly, synthetic												●										
6	169G	F0157700	Fore-end assembly, synthetic Camo APG									●					●								
6	169G	F0114000	Fore-end assembly, synthetic Camo MAX4									●					●								
6	169G	F0047802	Fore-end assembly, synthetic Camo TMB			●																			
6	169G	F0111100	Fore-end assembly, synthetic Camo TMB									●					●								
6	169U	F0062100	Fore-end assembly, synthetic							●															
6	169U	F0143501	Fore-end assembly, synthetic																●						
6	169U	F0158400	Fore-end assembly, synthetic Camo APG																●						
6	169U	F0318500	Fore-end assembly, synthetic Camo MAX4																●						
6	169U	F0148800	Fore-end assembly, synthetic Camo TMB																●						
7	174G	F0109500	Wood fore-end assembly								●														
8	394G	G0222900	Rubber butt plate								●	●	●												

M1 - M2

M1 - M2 | DRWG. 4 | STOCK AND FORE-END GROUP

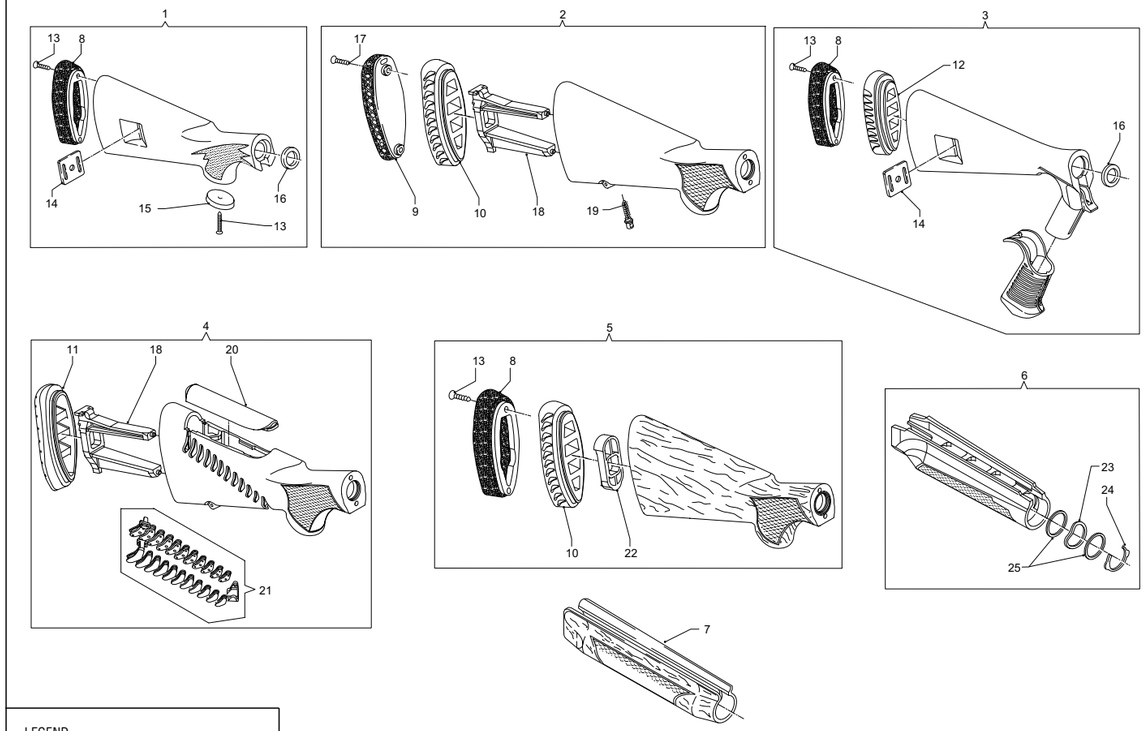

LEGEND
● = Original piece installed on standard model

04.18

No. Pos.	Código Manual	Código Proveedor	Descripción	P. Neto €	M1						M2														
					M1	Camo	Tactical	Practical	M1 Left Hand	M1 20	M2	Camo	Tactical	Practical	Rigato	M2 Left Hand	M2 Left Hand Camo	M2 20	M2 Camo 20						
9	151C	G0122900	Rubber butt plate (stock with fixed drop stop)		●																				
9	151C	G0297300	Rubber butt plate (stock with variable drop stop)		●																				
9	151U	G0169700	Rubber butt plate							●															
10	151C	G0025900	Rubber butt plate		●	●	●		●																
11	151G	G0256200	Gel recoil pad, short R.H. 15 mm.								●	●		●	●			●	●						
11	151G	G0228600	Gel recoil pad, long R.H. 35 mm.								●	●		●	●			●	●						
11	151G	G0216401	Gel recoil pad, medium R.H. 25 mm.								●	●		●	●			●	●						
11	151M	G0257800	Gel recoil pad, short L.H. 15 mm.								●	●		●	●	●	●	●	●						
11	151M	G0232400	Gel recoil pad, long L.H. 35 mm.								●	●		●	●	●	●	●	●						
11	151M	G0216500	Gel recoil pad, medium L.H. 25 mm.								●	●		●	●	●	●	●	●						
12	151T	G0138600	Rubber butt plate (Pistol Grip stock)								●		●												
13	062C	90001500	Self-threading screw		●	●	●	●	●																
14	063C	G0028200	Sling swivel plate				●						●												
15	078C	G0028700	Plug for pistol gripped stock, fixed drop				●						●												
15	078C	G0080600	Plug for pistol gripped stock, variable drop		●						●														
16	075C	G0024502	Stock ring		●								●												
17	062A	90007600	Threaded wood screw		●	●			●	●															
18	149C	G0026300	Spacer		●	●			●																
18	149C	G0215500	Spacer								●	●	●	●	●	●	●	●	●						
19	152C	G0014802	Removable sling swivel screw		●				●	●	●				●	●		●	●						
19	152C	G0028800	Removable sling swivel screw		●				●																
19	152C	G0101400	Removable sling swivel screw			●						●					●								
20	380G	G0256100	Gel comb, high R.H.								●	●		●	●			●	●						
20	380G	G0215700	Gel comb, low R.H.								●	●		●	●	●	●	●	●						
20	380G	G0233100	Gel comb, medium R.H.								●	●		●	●	●	●	●	●						
20	380M	G0295700	Gel comb, high L.H.													●	●								
21	379G	F0108700	Comfort chevrons assembly								●	●		●	●	●	●	●	●						
22	149Y	G0204801	Wood stock spacer								●														
23	135G	G0016500	Spring washer		●	●	●	●	●		●	●	●	●	●	●	●								
23	135U	G0166700	Spring washer							●								●	●						
24	136G	G0008800	Elastic ring		●	●	●	●	●		●	●	●	●	●	●	●								
24	136U	G0166600	Elastic ring							●								●	●						
25	134G	G0016600	Washer		●	●	●	●	●		●	●	●	●	●	●	●								
25	134U	G0166500	Washer							●								●	●						

M1 - M2

M1 - M2 | DRWG. 5 | BARREL GROUP

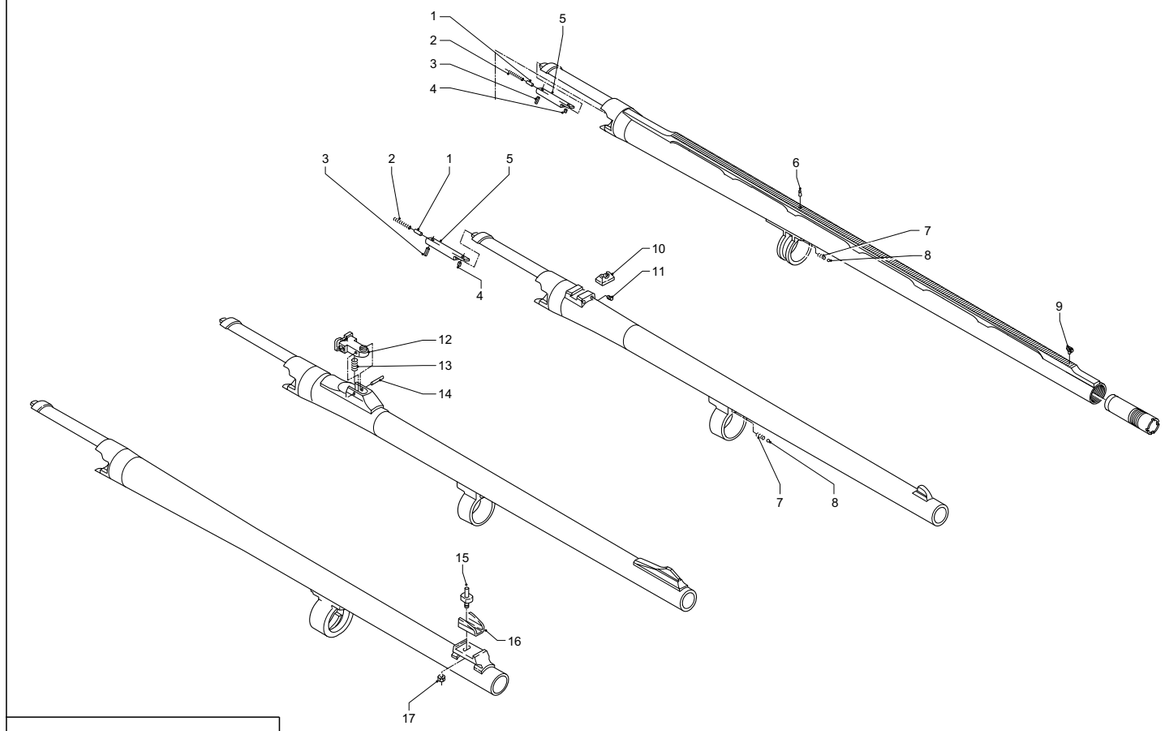

LEGEND
● = Original piece installed on standard model

04.20

No. Pos.	Código Manual	Código Proveedor	Descripción	P. Neto €	M1						M2														
					M1	Camo	Tactical	Practical	M1 Left Hand	M1 20	M2	Camo	Tactical	Practical	Rigato	M2 Left Hand	M2 Left Hand Camo	M2 20	M2 Camo 20						
1	045J	G0089101	Ejector pin		●	●	●	●	●	●	●	●	●	●	●	●	●	●	●						
2	046J	G0128100	Ejector pin spring Magnum		●	●	●	●	●	●	●	●	●	●	●	●	●	●	●						
3	047D	G0176000	Rear ejector retaining rivet							●								●	●						
3	047J	G0130800	Rear ejector retaining rivet		●	●	●	●	●		●	●	●	●	●	●	●								
4	172D	G0135600	Front ejector retaining rivet							●								●	●						
4	172J	G0128000	Front ejector retaining rivet		●	●	●	●	●		●	●	●	●	●	●	●								
5	168J	G0092700	Ejector frame Magnum		●	●	●	●	●	●	●	●	●	●	●	●	●	●	●						
6	153A	G0021501	Intermediate sight							●								●	●						
7	073J	G0128200	Spring for cap retaining ball								●	●	●	●	●	●	●	●	●						
8	074C	90000900	Cap retaining ball		●	●	●		●	●															
8	074J	G0122800	Cap retaining ball								●	●	●	●	●	●	●	●	●						
9	044B	G0020900	Front sight		●	●			●	●	●	●				●	●	●	●						
10	042C	G0024200	Rear sight, blued		●						●														
11	071A	90005800	Front-sight guide grub screw		●	●					●	●													
12	127N	F0027000	Rear sight for Slug barrel, adjustable rear sight												●										
13	259N	G0063700	Rear sight spring												●										
14	035A	90003100	Rear sight fixing pin												●			●	●						
15	110C	G0021100	Front sight				●						●												
15	110C	G0052700	Front sight				●	●																	
15	110F	G0021201	Front sight					●						●											
16	111F	G0022100	Front sight protection guard				●	●					●	●											
17	113F	90006100	Front sight fixing nut				●																		
17	113J	G0125600	Front sight fixing self-locking nut										●	●											
–	112F	90004500	Front sight elastic washer				●																		
–		F0049600	Rear sight assembly, blued				●	●					●	●											

M1 - M2

05

M3 SUPER 90

M3 SUPER 90
KROMO
TACTICAL
FOLDING STOCK
COMBAT

M3 (07)

M3 (07)

05.01

M3 SUPER 90 | DRWG. 1 | TRIGGER GUARD GROUP

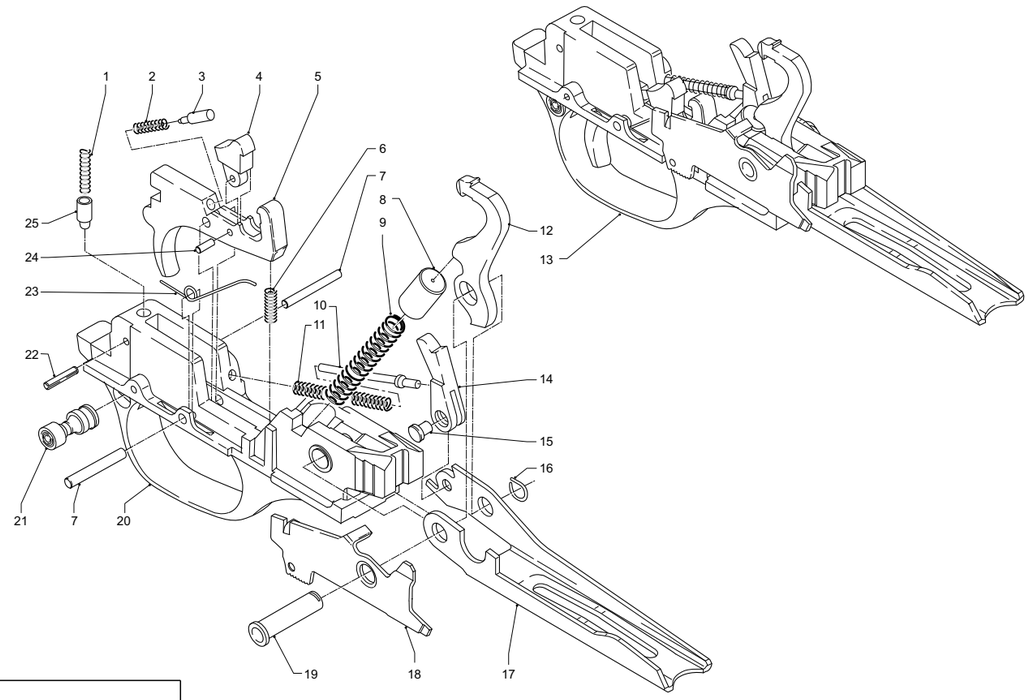

LEGEND
● = Original piece installed on standard model
A = Starting from number: **M104801**

05.02

No. Pos.	Código Manual	Código Proveedor	Descripción	P. Neto €	M3 SUPER 90					M3 (07)	
					M3 Super 90	Kromo	Tactical	Folding Stock	Combat	M3 (07)	
1	007A	G0032001	Safety plunger spring		●	●	●	●	●	●	
1	007A	G0074600	Safety plunger spring			●					
2	277J	G0128500	Disconnector spring		●	●	●	●	●	●	
3	006A	G0070800	Disconnector pin			●					
3	045J	G0089101	Disconnector pin		●	●	●	●	●	●	
4	005C	G0001200	Disconnector hammer		●	●	●	●	●	●	
5	009C	G0002303	Trigger (blued)		●A		●	●A	●	●	
5	009C	G0070602	Trigger (nickel-plated)			●					
6	011A	G0075000	Trigger spring			●					
6	011J	G0124000	Trigger spring		●		●	●	●	●	
7	010A	G0004500	Trigger pin		●		●	●	●	●	
7	010A	G0071300	Trigger pin			●					
8	003A	G0000101	Hammer spring cap		●		●	●	●	●	
8	003A	G0070100	Hammer spring cap			●					
9	004A	G0074800	Hammer spring			●					
9	004A	G0218200	Hammer spring		●		●	●	●	●	
10	022A	G0004301	Bolt latch pin		●		●	●	●	●	
10	022A	G0071200	Bolt latch pin			●					
11	021A	G0074701	Carrier spring			●					
11	021A	G0124200	Carrier spring		●		●	●	●	●	
12	002B	G0001000	Hammer		●A	●A	●A	●A	●	●	
13	001F	F0001002	Trigger group assembly, blued		●		●	●	●		
13	001F	F0034201	Trigger group assembly, chrome-plated			●					
13	001F	F0162400	Trigger group assembly							●	
14	019A	G0001400	Bolt stop tooth		●		●	●	●	●	
14	019A	G0070400	Bolt stop tooth			●					
15	020A	G0003900	Bolt stop tooth pin		●		●	●	●	●	
15	020A	G0071000	Bolt stop tooth pin			●					
16	018A	G0032300	Trigger guard pin spring		●		●	●	●	●	
16	018A	G0074900	Trigger guard pin spring			●					
17	017C	G0001601	Carrier		●		●	●	●	●	
17	017C	G0070501	Carrier			●					

M3 SUPER 90

M3 SUPER 90 | DRWG. 1 | TRIGGER GUARD GROUP

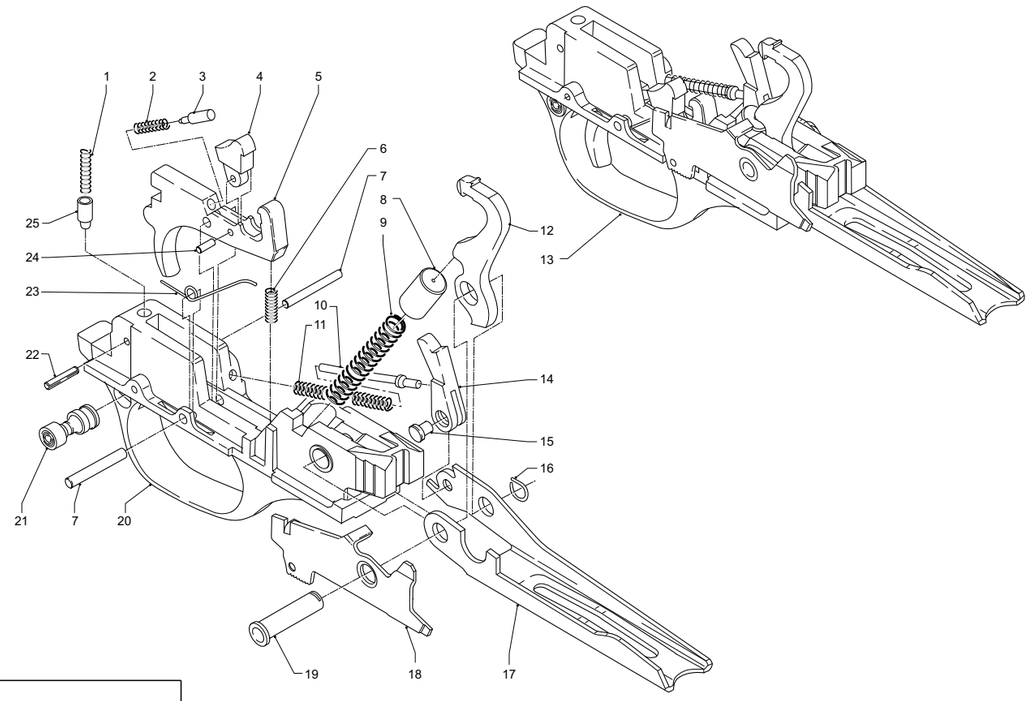

LEGEND
● = Original piece installed on standard model
A = Starting from number: **M104801**

05.04

No. Pos.	Código Manual	Código Proveedor	Descripción	P. Neto €	M3 SUPER 90					M3 (07)
					M3 Super 90	Kromo	Tactical	Folding Stock	Combat	M3 (07)
18	076F	G0003500	Cartridge drop lever		●		●	●	●	●
18	076F	G0070900	Cartridge drop lever			●				
19	016A	G0070300	Trigger pin bush			●				
19	016J	G0089900	Trigger pin bush		●		●	●	●	●
20	014B	G0002702	Trigger guard		●		●	●	●	●
20	014B	G0070701	Trigger guard			●				
20	014B	G0208000	Trigger guard							●
21	013C	G0000300	Hand safety button		●		●	●	●	●
21	013C	G0070200	Hand safety button			●				
22	006P	90003200	Safety spring retaining pin		●		●	●	●	●
22	012A	G0077800	Safety spring retaining pin			●				
23	077B	G0032800	Cartridge drop lever spring		●		●	●	●	●
23	077B	G0075100	Cartridge drop lever spring			●				
24	023A	G0004001	Disconnector pin		●		●	●	●	●
24	023A	G0071100	Disconnector pin			●				
25	008A	G0054200	Hand safety plunger		●		●	●	●	●
25	008A	G0076300	Hand safety plunger			●				

M3 SUPER 90

M3 SUPER 90 | DRWG. 2 | BOLT GROUP

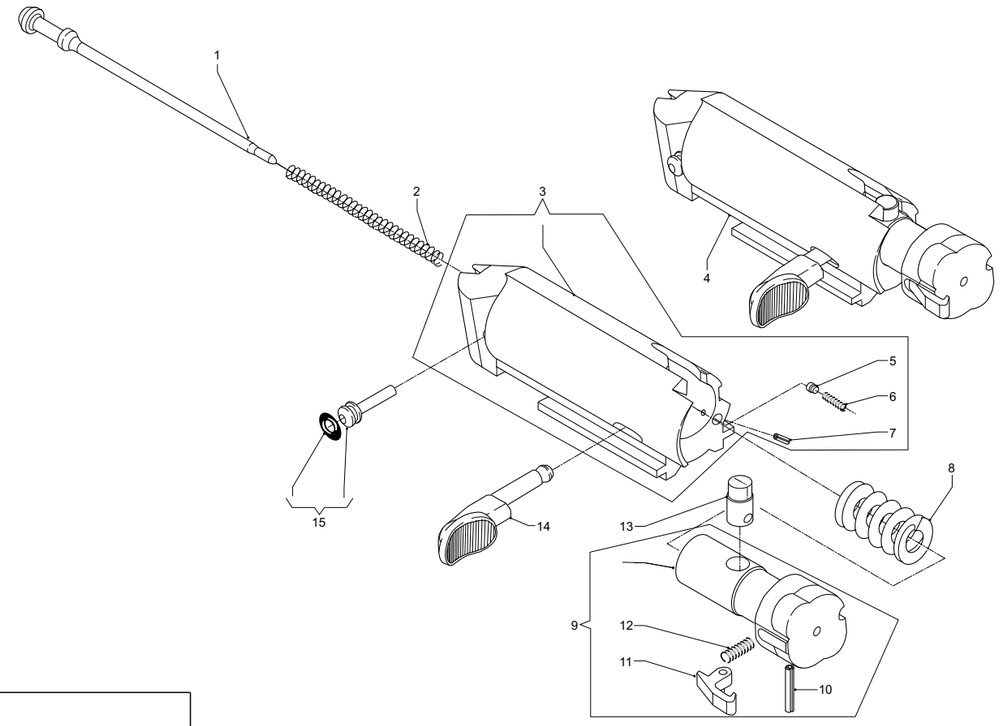

LEGEND
● = Original piece installed on standard model
A = Starting from number: **M104801**

05.06

No. Pos.	Código Manual	Código Proveedor	Descripción	P. Neto €	M3 SUPER 90					M3 (07)
					M3 Super 90	Kromo	Tactical	Folding Stock	Combat	M3 (07)
1	025B	G0007300	Firing pin		●	●	●	●		
1	025B	G0007301	Firing pin		●A	●A	●A	●A	●	●
2	037A	G0033101	Firing pin spring		●		●	●	●	●
2	037A	G0075300	Firing pin spring			●				
3	026F	F0003700	Bolt, partial		●		●	●	●	●
3	026F	F0034400	Bolt, partial			●				
3	026F	F0162500	Bolt, partial							●
4	024F	F0002601	Bolt group		●		●	●	●	●
4	024F	F0034300	Bolt group			●				
4	024F	F0162600	Bolt group							●
5	039A	G0007500	Bolt handle pin		●		●	●	●	●
5	039A	G0071800	Bolt handle pin			●				
6	038B	G0075500	Bolt handle retaining spring			●				
6	038J	G0126800	Bolt handle retaining spring		●	●	●	●	●	●
7	040A	90021600	Bolt handle spring retaining pin		●	●	●	●	●	●
8	036A	G0032901	Inertia spring		●		●	●	●	●
8	036A	G0075200	Inertia spring			●				
9	165A	F0004601	Locking head assembly		●		●	●	●	●
9	165A	F0034500	Locking head assembly			●				
10	035A	90003100	Extractor pin		●		●	●	●	●
10	035A	G0077700	Extractor pin			●				
11	034A	G0004901	Extractor		●		●	●	●	●
11	034A	G0071400	Extractor			●				
12	033A	G0075400	Extractor spring			●				
12	033J	G0126900	Extractor spring		●		●	●	●	●
13	031B	G0007900	Locking head pin		●	●	●	●	●	●
14	030C	G0005301	Bolt handle, blued		●		●	●	●	
14	030C	G0071501	Bolt handle, chrome-plated			●				
14	030C	G0005101	Bolt handle, round					●	●	
14	030J	G0125800	Bolt handle							●
15	028A	F0004501	Firing pin retaining pin		●		●	●	●	●
15	028A	F0035400	Firing pin retaining pin			●				

M3 SUPER 90

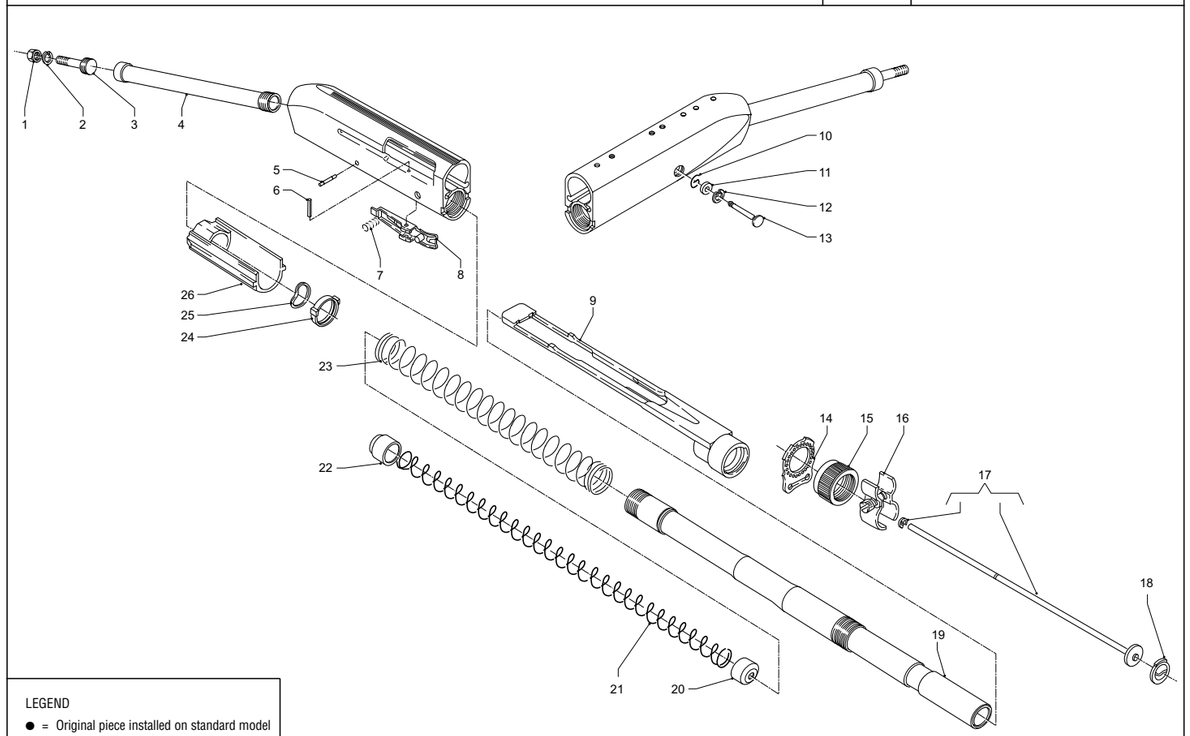

LEGEND
- ● = Original piece installed on standard model
- C = Starting from number: **M096546**
- E = Starting from number: **M495515**
- F = Starting from number: **M765197Z**

05.08

No. Pos.	Código Manual	Código Proveedor	Descripción	P. Neto €	M3 SUPER 90					M3 (07)
					M3 Super 90	Kromo	Tactical	Folding Stock	Combat	M3 (07)
1	053A	90006000	Stock retaining nut		●	●	●	●	●	
2	052A	90004800	Elastic washer		●	●	●	●	●	
3	050B	F0111300	Stock retaining nut screw		●	●		●	●	
3	050B	G0073000	Stock retaining nut screw			●				
3	050B	F0111301	Stock retaining nut screw (from reg. nr. M765197Z)		●F	●F		●F	●F	
4	049B	G0073100	Recoil spring tube			●				
4	049B	G0017901	Recoil spring tube (up to reg. nr. M495514)		●	●	●	●	●	
4	049D	F0084601	Recoil spring tube (from reg. nr. M495515)		●E	●E	●E	●E	●E	
5	015A	G0030701	Trigger guard pin		●		●	●	●	
5	015A	G0074500	Trigger guard pin			●				
6	056B	90002800	Carrier latch pin		●		●	●	●	●
6	056B	G0077600	Carrier latch pin			●				
7	058B	G0075700	Carrier latch spring			●				
7	058J	G0126200	Carrier latch spring		●		●	●	●	●
8	057F	G0014501	Carrier latch		●		●	●	●	●
8	057F	G0072401	Carrier latch			●				
9	095F	G0074000	Bolt swivel assembly			●				
9	095F	G0116000	Bolt swivel assembly		●		●	●	●	●
10	268J	G0132100	Trigger guard retaining spring							●
11	267J	G0131000	Trigger guard retaining spacer							●
12	266J	G0132100	Trigger guard retaining pin							●
13	015J	G0086600	Trigger guard pin							●
14	067F	G0015601	Sling swivel ring on blued cap		●		●	●	●	●
14	067F	G0072500	Sling swivel ring on nickel-plated cap			●				
15	069F	F0006100	Anodised barrel retaining cap		●		●	●	●	●
15	069F	F0034700	Nickel-plated barrel retaining cap			●				
16	241F	F0057000	Barrel-magazine tube retaining ring assembly, blued		●		●	●	●	●
16	241F	F0057100	Barrel-magazine tube retaining ring assembly, chromed-plated			●				
17	085C	F0009000	Two round limiter		●		●	●		
17	085C	F0009101	Three round limiter		●		●	●	●	●
17	085C	F0035100	Three round limiter			●				
18	086C	G0055200	Limiter retaining ring		●		●	●	●	●

M3 SUPER 90

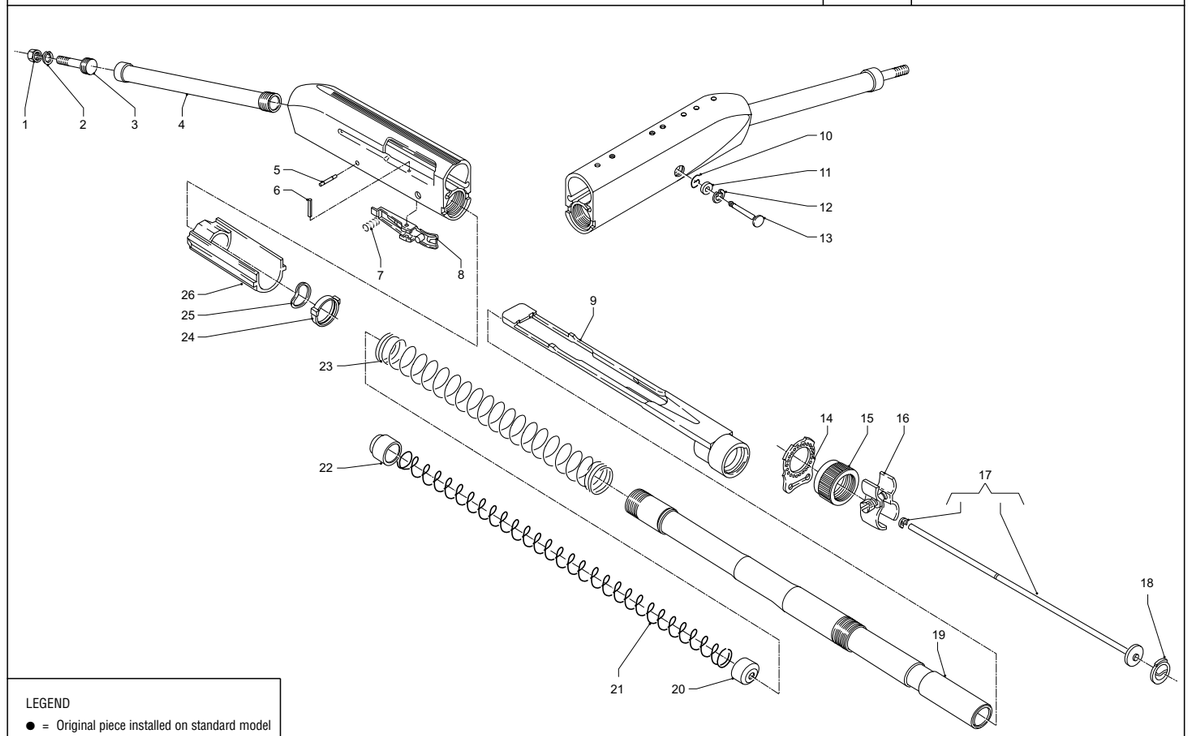

LEGEND
- ● = Original piece installed on standard model
- C = Starting from number: **M096546**
- E = Starting from number: **M495515**
- F = Starting from number: **M765197Z**

05.10

No. Pos.	Código Manual	Código Proveedor	Descripción	P. Neto €	M3 SUPER 90					M3 (07)
					M3 Super 90	Kromo	Tactical	Folding Stock	Combat	M3 (07)
18	086C	G0076500	Limiter retaining ring			●				
19	066F	G0018500	Magazine tube, blued		●		●	●		
19	066F	G0018501	Magazine tube, blued		●		●	●	●	●
19	066F	G0073200	Magazine tube, nickel-plated			●				
20	068C	G0062300	Magazine tube plug		●		●	●	●	●
20	068C	G0076700	Magazine tube plug			●				
21	064C	G0033600	Magazine spring		●		●	●	●	●
21	064C	G0075600	Magazine spring			●				
22	065G	G0231201	Magazine follower		●	●	●	●	●	●
23	100F	G0034400	Spring		●		●	●	●	●
23	100F	G0075800	Spring			●				
24	071F	G0016701	Washer		●		●	●	●	●
24	071F	G0072700	Washer			●				
25	072F	G0016400	Elastic washer		●		●	●	●	●
25	072F	G0072600	Elastic washer			●				
26	088F	G0017201	Fore-end slide support		●C	●	●	●C	●	●

M3 SUPER 90

M3 SUPER 90 | DRWG. 4 | STOCK AND FORE-END GROUP

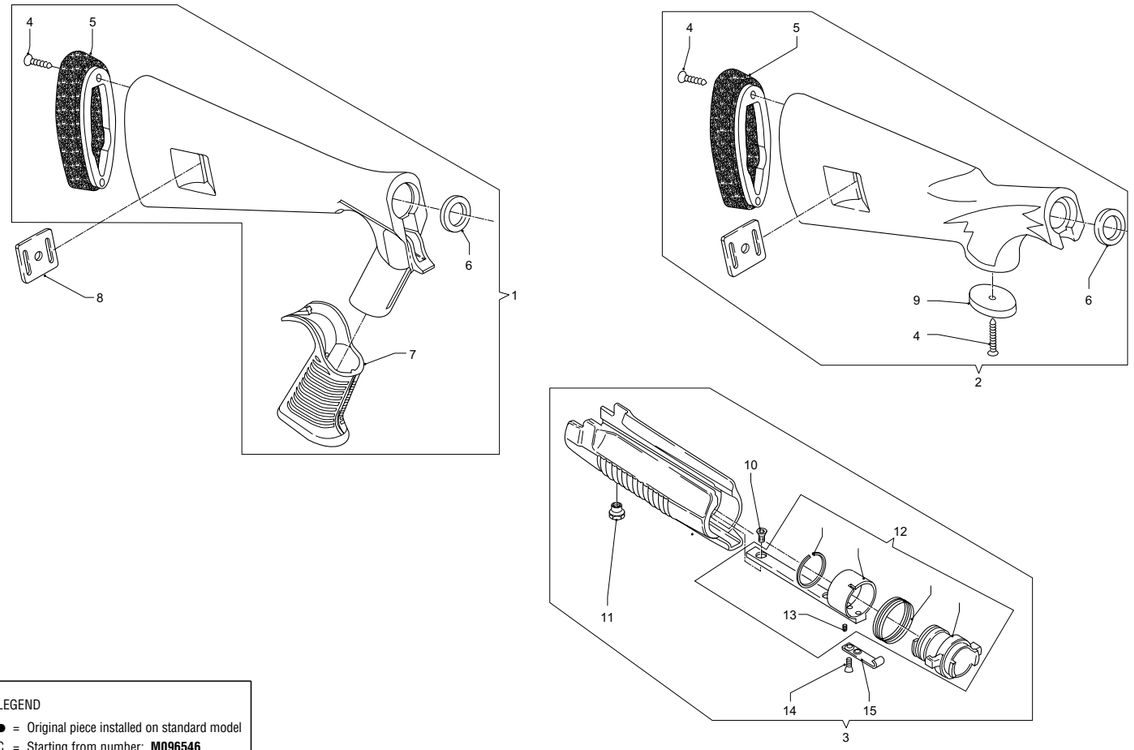

LEGEND
● = Original piece installed on standard model
C = Starting from number: **M096546**

05.12

No. Pos.	Código Manual	Código Proveedor	Descripción	P. Neto €	M3 SUPER 90					M3 (07)	
					M3 Super 90	Kromo	Tactical	Folding Stock	Combat	M3 (07)	
1	160C	F0033201	Pistol-grip stock (rubber butt plate)		●		●		●		
2	161C	F0016401	Stock synthetic (rubber butt plate)		●		●		●		
2	161C	F0035201	Stock synthetic (rubber butt plate)			●					
3	170F	F0034601	Fore-end synthetic with selector			●					
3	170F	F0162801	Fore-end synthetic with selector		●		●	●	●	●	
4	062C	90001500	Self-threading screw		●		●	●	●		
4	062C	G0076900	Self-threading screw			●					
5	061C	G0122900	Rubber butt plate		●	●		●	●		
6	075C	G0024502	Stock ring		●	●	●	●	●		
7	083J	G0123100	Rubber grip		●		●	●	●		
8	063C	G0028200	Sling swivel plate		●		●	●	●		
8	063C	G0073900	Sling swivel plate			●					
9	078C	G0028700	Plug for pistol gripped stock, fixed drop		●	●		●	●		
10	090F	90001800	Fore-end retaining screw		●C		●	●C	●	●	
10	090F	G0077000	Fore-end retaining screw			●					
11	103F	G0013800	Nut		●C		●	●C	●	●	
11	103F	G0072300	Nut			●					
12	189F	F0162701	Action selector assembly, mat blueing		●		●	●	●	●	
12	189F	F0034901	Action selector assembly, nickel-plated			●					
13	091F	90005400	Selector limit screw		●		●	●	●		
13	091F	G0077400	Selector limit screw			●					
14	102F	G0077100	Plate fixing screw			●					
15	101F	G0014600	Blued plate		●		●	●	●		
15	101F	G0072800	Nickel-plated plate			●					

M3 SUPER 90

05. 13

M3 SUPER 90 | DRWG. 5 | BARREL GROUP

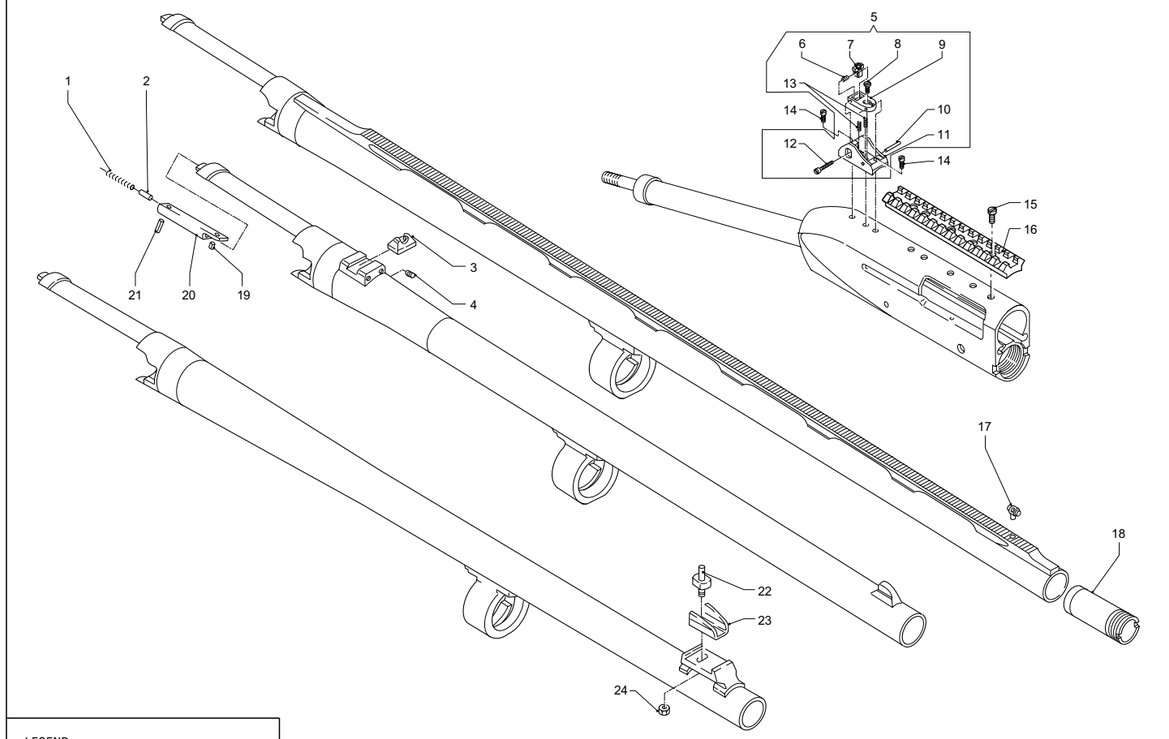

LEGEND
● = Original piece installed on standard model

05.14

No. Pos.	Código Manual	Código Proveedor	Descripción	P. Neto €	M3 SUPER 90					M3 (07)	
					M3 Super 90	Kromo	Tactical	Folding Stock	Combat	M3 (07)	
1	046J	G0128100	Ejector pin spring		●	●	●	●	●		
2	045J	G0089101	Ejector pin		●	●	●	●	●		
3	042C	G0024200	Rear sight, blued		●			●	●		
3	042C	G0073700	Rear sight, nickel-plated			●					
4	043C	90005800	Rear sight screw		●		●	●	●		
4	043C	G0077500	Rear sight screw			●					
5	127C	F0049600	Rear sight assembly, blued				●		●	●	
6	258C	G0104600	Windage spring				●		●	●	
7	253C	G0104000	Rear sight aperture				●		●	●	
8	255C	G0104300	Elevation adjustment screw				●		●	●	
9	254C	G0104100	Rear sight support				●		●	●	
10	257C	G0104500	Sight pin				●		●	●	
11	126C	G0104200	Rear sight protection guard				●		●	●	
12	256C	G0104400	Windage adjustment screw				●		●	●	
13	259C	G0104700	Elevation spring				●		●	●	
14	128C	G0105400	Rear sight screw				●		●		
15	128S	G0298000	Rail screw				●		●		
15	128S	G0108201	Rail screw							●	
16	260N	G0131400	Telescope guide (see accessories)				●		●	●	
17	044B	G0020900	Fluorescent front sight		●	●		●			
17	110C	G0021100	Front sight				●		●		
18	213B		nternal choke (see accessories)								
19	172J	G0128000	Front ejector retaining rivet		●	●	●	●	●		
20	168J	G0092700	Ejector frame Magnum, chrome-plated		●	●	●	●	●		
21	047J	G0130800	Rear ejector retaining rivet		●	●	●	●	●		
22	110F	G0021201	Front sight				●				
23	111F	G0022100	Front sight protection guard				●				
24	113J	G0125600	Front sight retaining nut				●				

M3 SUPER 90

05. 15

M3 SUPER 90 | DRWG. 6 | FOLDING STOCK GROUP

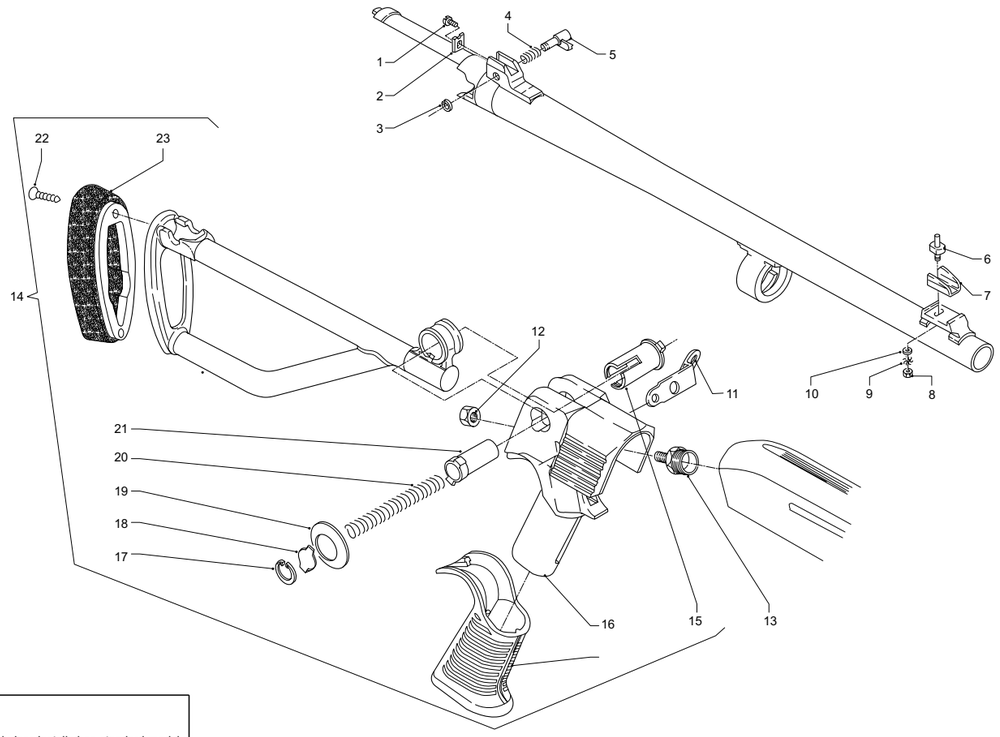

LEGEND
● = Original piece installed on standard model

05.16

No. Pos.	Código Manual	Código Proveedor	Descripción	P. Neto €	M3 SUPER 90					M3 (07)	
					M3 Super 90	Kromo	Tactical	Folding Stock	Combat	M3 (07)	
1	104F	90001700	Rear sight retaining screw					●			
2	105F	G0024100	Rear sight					●			
3	106F	90000600	Stock locking pin ring					●			
4	107F	G0034900	Stock locking pin spring					●			
5	108F	G0021900	Stock locking pin (folded)					●			
6	110F	G0021201	Front sight					●			
7	111F	G0022100	Front sight protection guard					●			
8	113F	90006100	Front sight nut					●			
9	112F	90004500	Front sight elastic washer					●			
10	243F	90010200	Washer					●			
11	114F	G0028301	Sling swivel on grip					●			
12	053A	90006000	Stock retaining nut					●			
13	116F	G0015200	Grip frame retaining pin Ø 19					●			
13	116F	G0015201	Grip frame retaining pin Ø 21					●			
14	171F	F0041901	Grip folding stock assembly					●			
15	115F	G0025200	Stock locking pin bushing					●			
16	117F	F0016901	Grip folding stock assembly					●			
17	118F	90006300	Blocking ring					●			
18	119F	G0028600	Stock locking pin bushing cap					●			
19	120F	90004300	Flat return spring					●			
20	121F	G0035200	Stock locking pin spring					●			
21	122F	G0026500	Stock locking pin (open)					●			
22	129F	90001300	Butt plate retaining screw					●			
23	061C	G0122900	Rubber butt plate					●			

M3 SUPER 90

M3 SUPER 90 | DRWG. 7 | TELESCOPIC STOCK GROUP

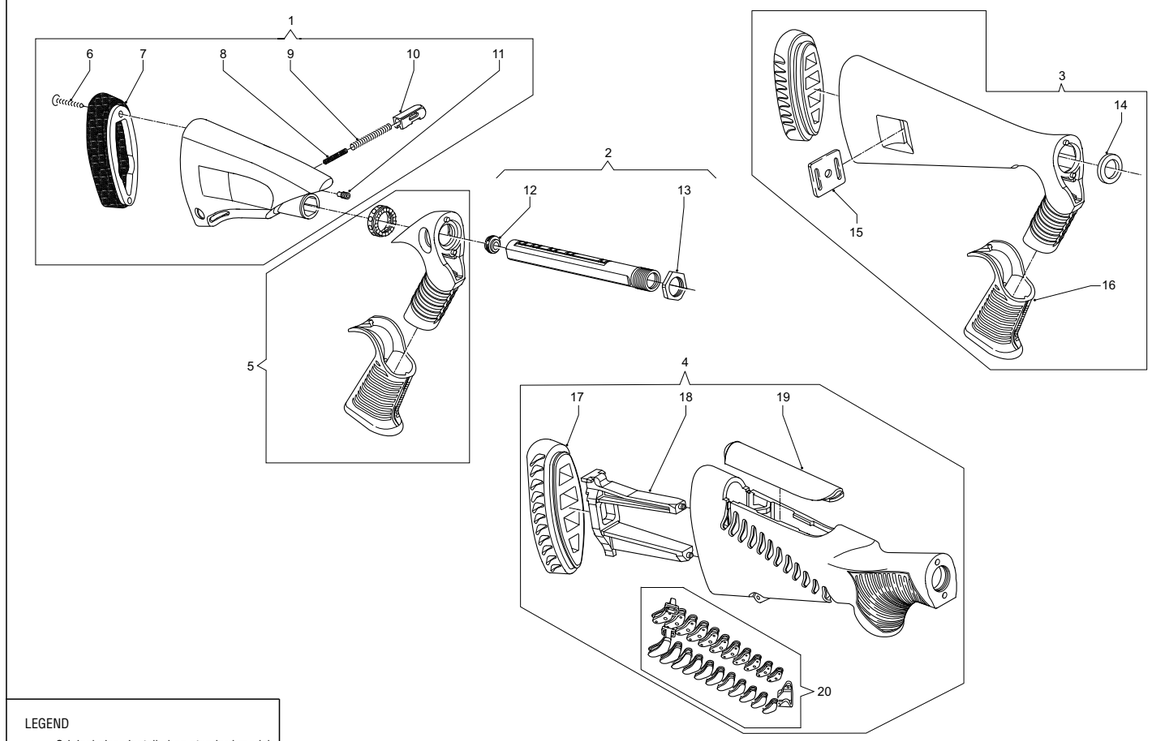

LEGEND
● = Original piece installed on standard model

05.18

No. Pos.	Código Manual	Código Proveedor	Descripción	P. Neto €	M3 SUPER 90					M3 (07)	
					M3 Super 90	Kromo	Tactical	Folding Stock	Combat	M3 (07)	
1	265J	F0142901	Telescopic stock assembly							●	
2	166S	F0143201	Recoil spring tube assembly							●	
3	160C	F0135001	Stock Pistol Grip							●	
4	159S	F0142001	Stock Comfortech							●	
5	117S	F0143000	Pistol grip handle assembly							●	
6	062C	90001500	Butt plate screw							●	
7	061C	G0122900	Telescopic stock butt plate							●	
8	395S	G0263301	Stock clickstop pin							●	
9	004A	G0032201	Stock retaining pin spring							●	
10	108S	G0263202	Stock retaining pin							●	
11	224N	G0112400	Action bar retaining pin							●	
12	050J	G0127400	Recoil spring retaining plug							●	
13	075J	G0111200	Grip ring nut							●	
14	075C	G0024502	Stock ring							●	
15	063C	G0028200	Swivel plate							●	
16	083C	G0026200	Stock grip							●	
17	394G	G0222900	Rubber butt plate							●	
18	149C	G0215500	Spacer Comfort							●	
19	380S	G0261500	Gel comb							●	
20	379G	F0108700	Chevrons assembly							●	

M3 SUPER 90

06

M4 SUPER 90

06.01

M4 SUPER 90	DRWG. 1	TRIGGER GUARD GROUP

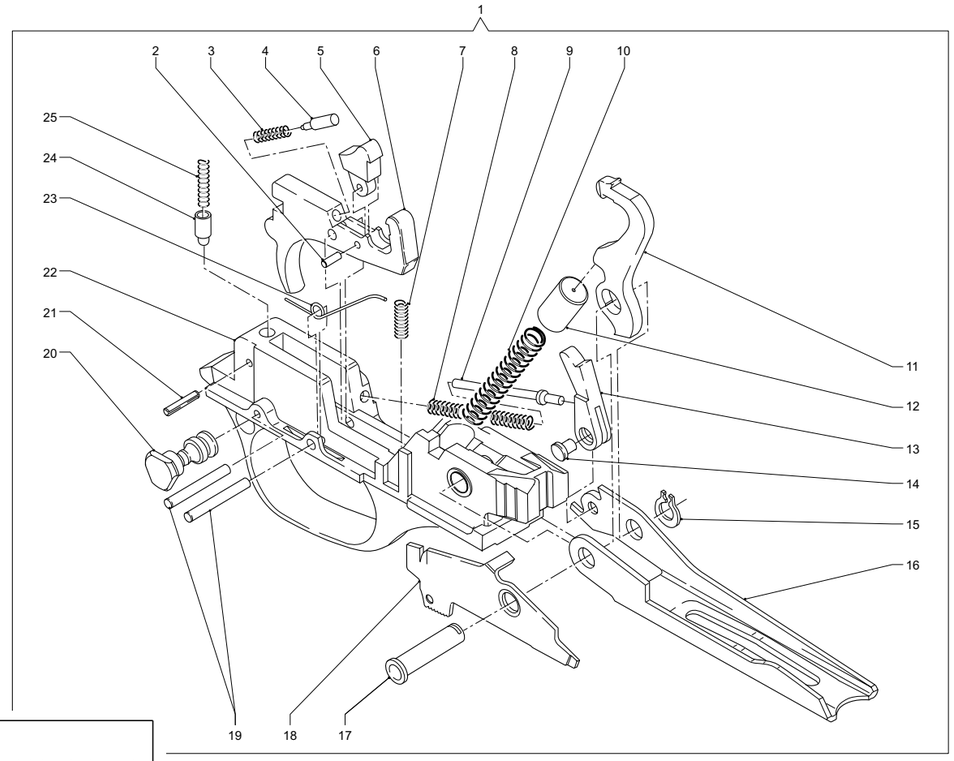

LEGEND
● = Original piece installed on standard model

06.02

| No. Pos. | Código Manual | Código Proveedor | Descripción | P. Neto € | M4 SUPER 90 | | |

M4 SUPER 90 | DRWG. 2 | BOLT GROUP

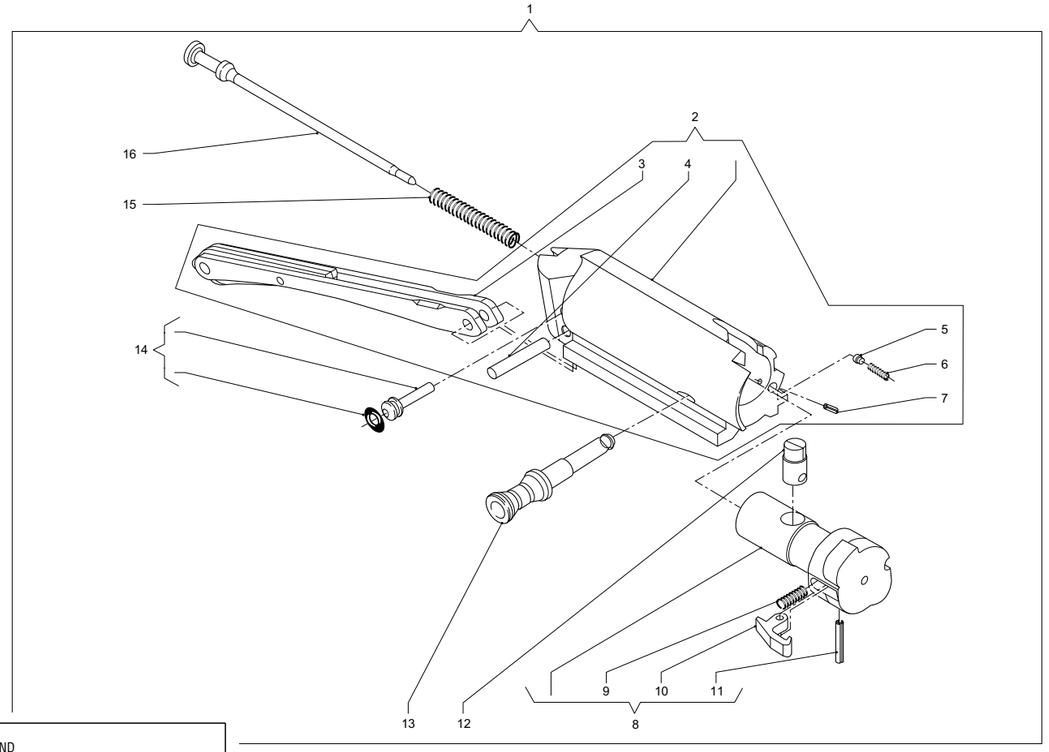

LEGEND
● = Original piece installed on standard model

06.04

No. Pos.	Código Manual	Código Proveedor	Descripción	P.Neto €	M4 SUPER 90																			
					M4 Super 90																			
1	024J	F0059000	Bolt group		●																			
2	026J	F0287700	Bolt assembly, partial		●																			
3	027J	G0091000	Link		●																			
4	029J	G0091400	Link pin		●																			
5	039J	G0091200	Bolt handle pin		●																			
6	038J	G0126800	Bolt handle retaining spring		●																			
7	040A	90021600	Retaining pin		●																			
7	040J	G0091200	Bolt handle spring retaining pin		●																			
8	165J	F0059100	Locking head assembly		●																			
9	033J	G0126900	Extractor spring		●																			
10	034J	G0091300	Extractor		●																			
11	035J	G0124100	Extractor pin		●																			
12	031J	G0084500	Locking head pin		●																			
13	030J	G0125800	Bolt handle		●																			
14	028J	F0291500	Firing pin retaining pin assembly		●																			
15	037J	G0133900	Firing pin spring		●																			
16	025J	G0126100	Firing pin		●																			

M4 SUPER 90

06. 05

M4 SUPER 90 | DRWG. 3 | RECEIVER - MAGAZINE GROUP

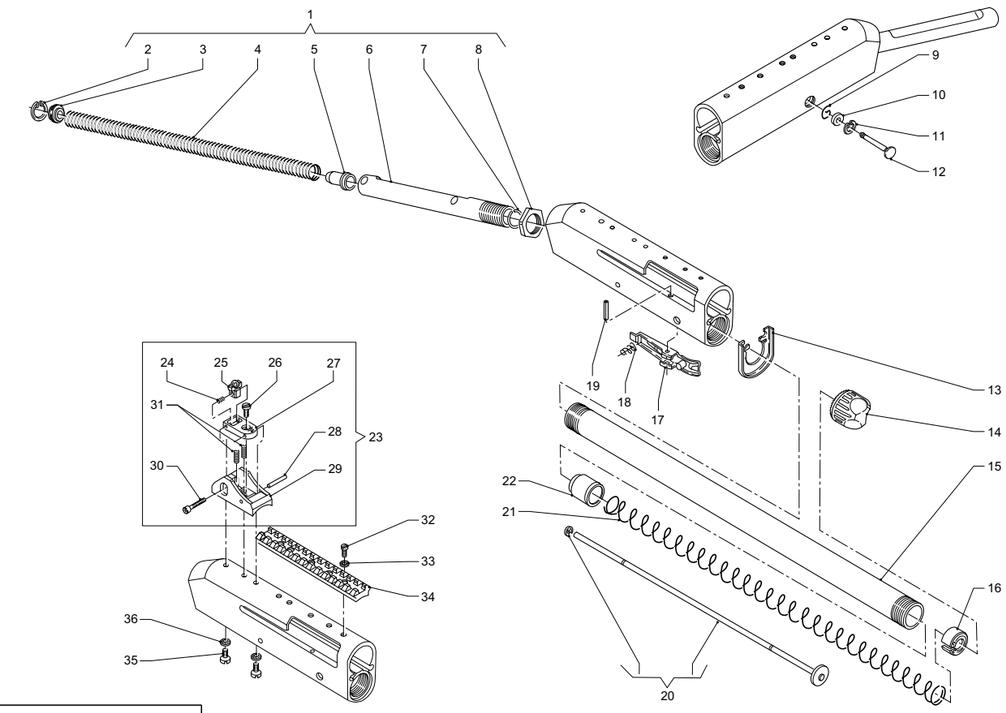

LEGEND
● = Original piece installed on standard model

06.06

No. Pos.	Código Manual	Código Proveedor	Descripción	P.Neto €	M4 Super 90			
1	166J	F0319000	Recoil spring tube assembly, 5-pos.		●			
2	052J	G0132200	Recoil spring plug ring		●			
3	050J	G0127400	Recoil spring plug		●			
4	054J	G0093100	Recoil spring		●			
5	055W	G0189100	Recoil spring plunger pin		●			
6	049J	G0572800	Recoil spring tube, 5-pos.		●			
7	183J	G0124900	Flexible ring		●			
8	075J	G0111200	Ring nut		●			
9	268J	G0131600	Trigger guard pin spring		●			
10	267J	G0131000	Retaining spacer		●			
11	266J	G0132100	Retaining ring		●			
12	015J	G0086600	Trigger guard pin		●			
13	088J	G0088300	Forearm retaining band		●			
14	069J	G0123000	Fore-end follower		●			
15	066J	G0125300	Magazine tube		●			
16	132J	G0127000	Magazine spring seal ring		●			
17	057B	G0014301	Carrier latch		●			
18	058J	G0126200	Carrier latch spring		●			
19	056J	G0123700	Carrier latch pin		●			
20	085C	F0009000	Two round limiter assembly		●			
20	085C	F0009101	Three round limiter assembly		●			
21	064J	G0084800	Magazine spring		●			
22	065J	G0125400	Magazine follower		●			
23	127J	F0058900	Rear sight assembly		●			
24	258J	G0104600	Windage spring		●			
25	253J	G0104000	Rear sight aperture		●			
26	255J	G0104400	Elevation adjustment screw		●			
27	254J	G0104100	Rear sight support		●			
28	257J	G0104500	Sight pin		●			
29	126J	G0104200	Rear sight base		●			
30	256J	G0104400	Windage adjustment screw		●			
31	259J	G0104700	Elevation spring		●			

No. Pos.	Código Manual	Código Proveedor	Descripción	P.Neto €	M4 Super 90			
32	261J	G0084300	Telescope screw		●			
33	262J	90011600	Washer		●			
34	260J	G0084400	Telescope guide		●			
35	128J	G0128400	Rear sight screw		●			
36	263J	G0126700	Rear sight washer		●			
–	075C	G0024502	Stock ring		●			

M4 SUPER 90 | DRWG. 4 | STOCK GROUP

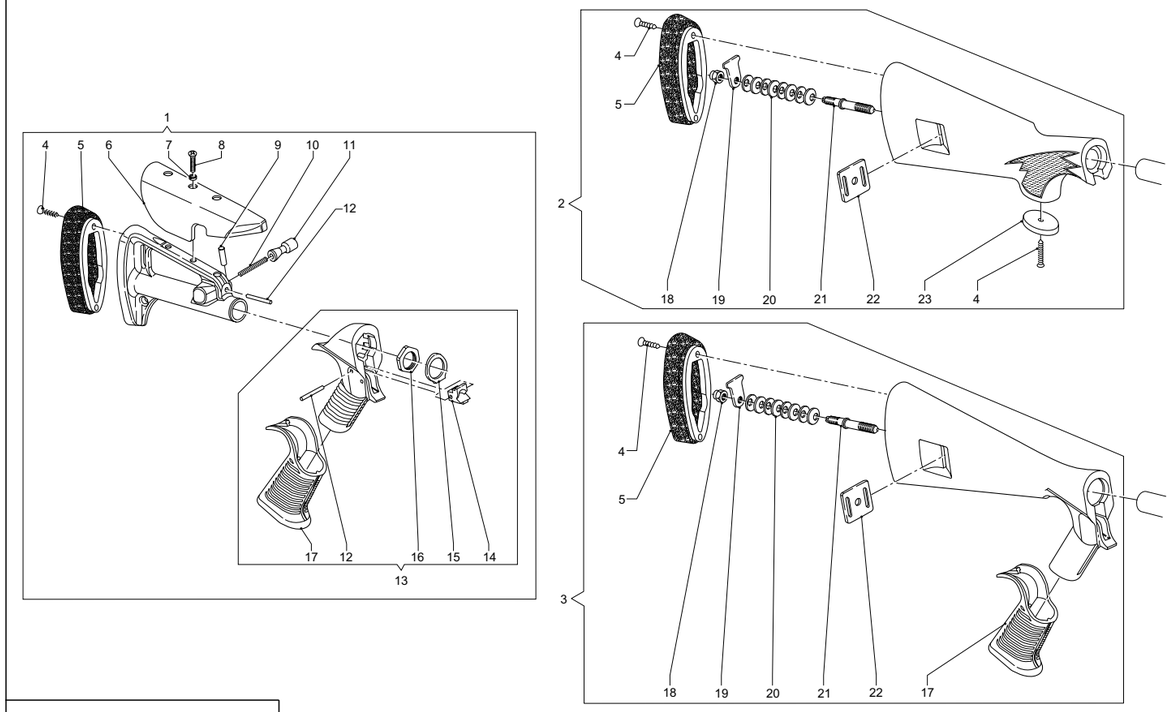

LEGEND
● = Original piece installed on standard model

06.10

No. Pos.	Código Manual	Código Proveedor	Descripción	P.Neto €	M4 SUPER 90																			
					M4 Super 90																			
1	265J	F0054200	Telescoping stock assembly		●																			
2	161J	F0063000	Stock assembly, synthetic		●																			
3	160J	F0063100	Stock assembly, Pistol Grip		●																			
4	062J	G0135500	Stock self-threaded screw		●																			
4	129J	G0124300	Butt plate self-threaded screw		●																			
5	061C	G0122900	Rubber butt plate		●																			
6	149J	G0117600	Stock cover		●																			
7	262J	G0132300	Stock washer		●																			
8	264J	G0124500	Stock cover screw		●																			
9	106J	G0124800	Telescoping stock roller		●																			
10	107J	G0111000	Stock retaining pin spring		●																			
11	108J	G0110900	Stock retaining pin		●																			
12	080J	G0127900	Pistol grip retaining pin		●																			
13	117J	F0054100	Pistol grip handle assembly		●																			
14	079J	G0111300	Plate retainer		●																			
15	078J	G0115900	Grip plate		●																			
16	075J	G0111200	Grip ring nut		●																			
17	083C	G0123100	Rubber grip		●																			
17	083J	G0123100	Rubber grip		●																			
18	053J	G0135300	Stock retaining nut		●																			
19	278J	G0135200	Stock retaining plate		●																			
20	279J	G0135400	Field stock retaining spring		●																			
21	280J	G0114801	Stock retaining pin		●																			
22	063J	G0028200	Swing swivel plate		●																			
23	078C	G0028700	Plug for pistol gripped stock, fixed drop		●																			

M4 SUPER 90

M4 SUPER 90 | DRWG. 5 | BARREL GROUP

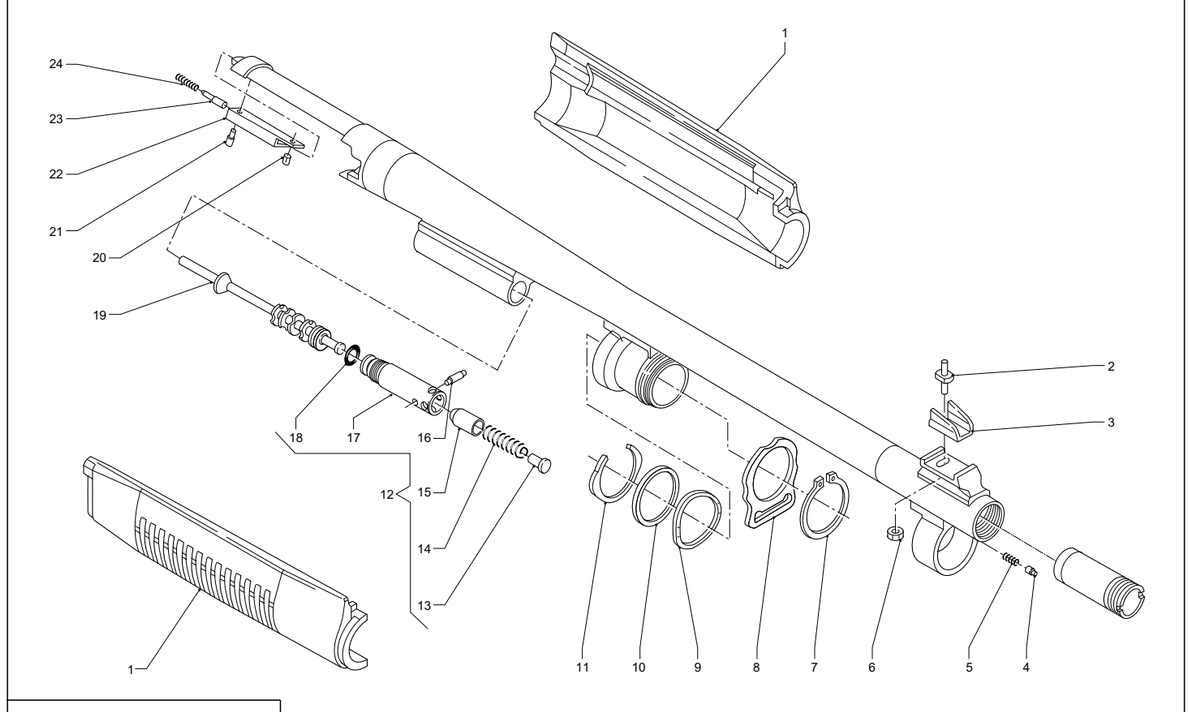

LEGEND
● = Original piece installed on standard model

06.12

No. Pos.	Código Manual	Código Proveedor	Descripción	P.Neto €	M4 SUPER 90																			
					M4 Super 90																			
1	070J	G0087400	Fore-end synthetic (R.H. side)		●																			
1	070J	G0087700	Fore-end synthetic (L.H. side)		●																			
2	110J	G0127301	Front sight		●																			
3	111J	G0092500	Front sight protection guard		●																			
4	074J	G0122800	Cap retaining pin		●																			
5	073J	G0128200	Spring for cap retaining ball		●																			
6	113J	G0125600	Front sight retaining nut		●																			
7	133J	G0130200	Sling plate retainer		●																			
8	067J	G0130000	Sling attachment plate		●																			
9	135J	G0092200	Elastic washer		●																			
10	134J	G0092300	Washer		●																			
11	136J	G0092400	Retaining ring		●																			
12	276J	F0059200	Gas plug assembly		●																			
13	275J	G0129100	Gas plug spacer		●																			
14	274J	G0088800	Gas plug spring		●																			
15	273J	G0125100	Gas plug cap		●																			
16	272J	G0125200	Gas plug pin		●																			
17	271J	G0127100	Gas plug		●																			
18	270J	90011300	Gas plug O-Ring		●																			
19	269J	G0127200	Gas piston		●																			
20	172J	G0128000	Front ejector retaining rivet		●																			
21	047J	G0130800	Rear ejector retaining rivet		●																			
22	168J	G0092700	Ejector frame Magnum		●																			
23	045J	G0089101	Ejector pin		●																			
24	046J	G0128100	Ejector pin spring		●																			

M4 SUPER 90

07

SL 80 - PASIÓN

PREMIUM
PREMIUM PLUS
BELLMONTE I
BELLMONTE II

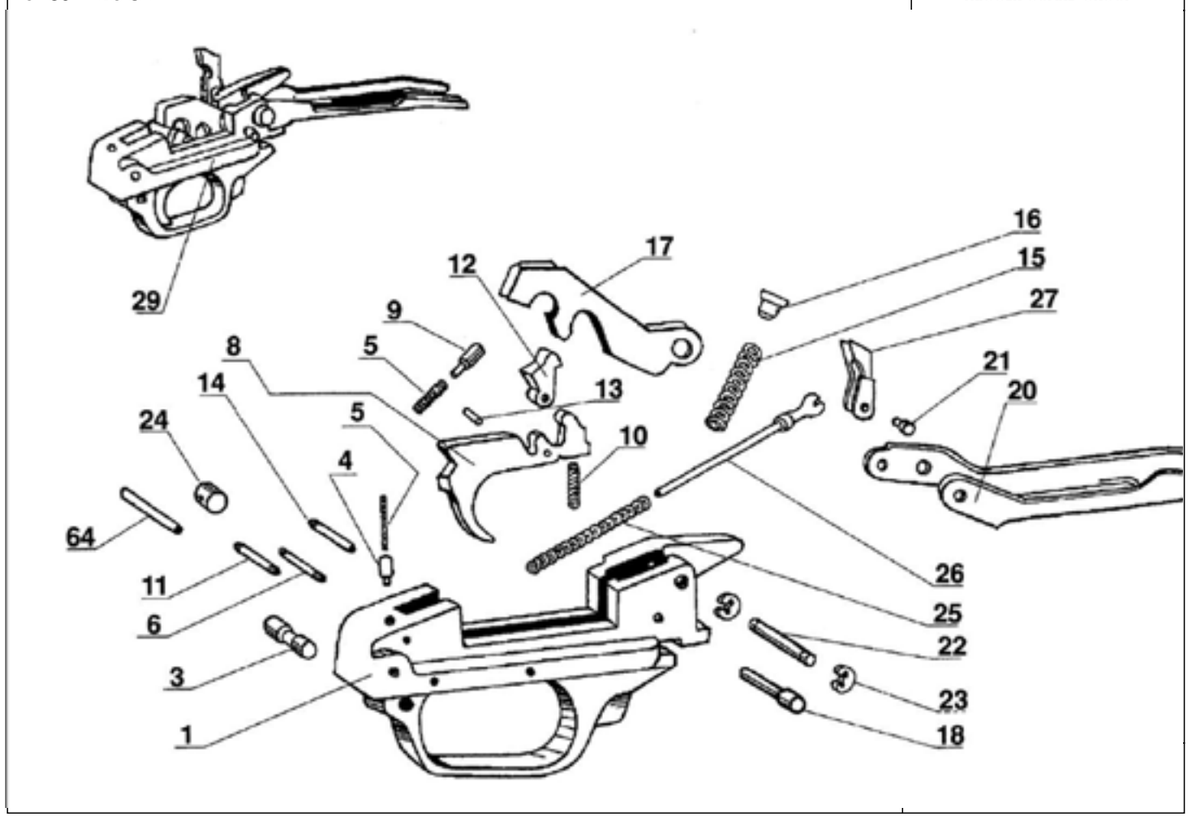

07.02 El dibujo de esta guarda se corresponde con la de la Pasión de Aluminio.

N.Pos	Código Proveedor	Descripción		PREMIUM P. MADERA	PREMIUM P. SUPERLIGERA	PREMIUM P. CAMO	PREMIUM P. SINTETICA	PASION	BELLMONTE I MADERA	BELLMONTE I CAMO	BELLMONTE I SINTETICA	BELLMONTE II MADERA							
1	4100050100	GUARDA ANODIZADA DIESTRO ALUMINIO						●											
1	4100061100	GUARDA ANODIZADA ZURDO ALUMINIO						●											
1	4100000150	GUARDA SINTÉTICA DIESTRO		●	●	●	●		●	●	●	●							
1	4100061150	GUARDA SINTÉTICA ZURDO		●	●	●	●		●	●	●	●							
3	4100050101	BOTON SEGURO PINTADO		●	●	●	●	●	●	●	●	●							
04	4100000102	PITON RESORTE SEGURO PAVONADO		●	●	●	●	●	●	●	●	●							
05	4100000103	RESORTE DIENTE		●	●	●	●	●	●	●	●	●							
06	4100050104	PASADOR FIJACION SEGURO PAVON.		●	●	●	●	●	●	●	●	●							
08	4110051105	GATILLO PAVONADO				●				●	●	●							
08	4110050105	GATILLO CROMADO					●		●										
08	4120050105	GATILLO DORADO		●	●			●				●							
08	4120061105	GATILLO DORADO ZURDO		●	●			●				●							
09	4100000107	GUIA RESORTE DIENTE		●	●	●	●	●	●	●	●	●							
10	4100000108	RESORTE GATILLO		●	●	●	●	●	●	●	●	●							
11	4100050109	PASADOR GATILLO PAVONADO		●	●	●	●	●	●	●	●	●							
12	4100050110	DIENTE ENG. SEGURIDAD CROMADO		●	●	●	●	●	●	●	●	●							
13	4100000111	PERNO DIENTE		●	●	●	●	●	●	●	●	●							
14	4100050112	PERNO GATILLO PAVONADO		●	●	●	●	●	●	●	●	●							
15	4100000113	RESORTE MARTILLO		●	●	●	●	●	●	●	●	●							
16	4100050114	GUIA RESORTE MARTILLO PAVONADO		●	●	●	●	●	●	●	●	●							
17	4100050116	MARTILLO CROMADO		●	●	●	●	●	●	●	●	●							
18	4100050117	PERNO MARTILLO PAVONADO		●	●	●	●	●	●	●	●	●							
20	4120050118	ELEVADOR ABRILLANTADO		●	●			●				●							
20	4110050118	ELEVADOR ABRILLATDO Y SATINADO					●		●										
20	4110051118	ELEVADOR BTTA.NEGRO-TECNIFER-Q				●				●	●								

PASION-PREMIUM-BELLMONTE

SL 80 - PASIÓN

TRIGGER GUARD GROUP

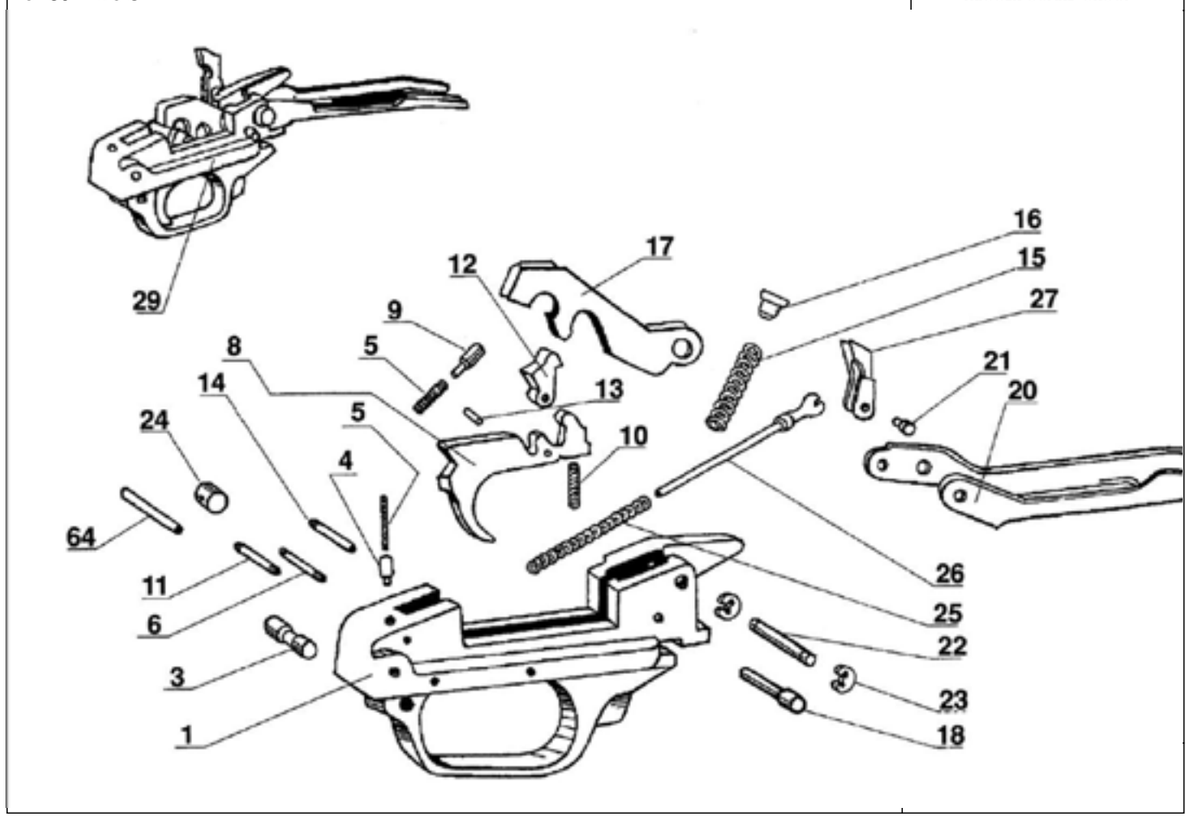

07.02 El dibujo de esta guarda se corresponde con la de la Pasión de Aluminio.

N.Pos	Código Proveedor	Descripción		PREMIUM P. MADERA	PREMIUM P. SUPERLIGERA	PREMIUM P. CAMO	PREMIUM P. SINTETICA	PASIÓN	BELLMONTE I MADERA	BELLMONTE I CAMO	BELLMONTE I SINTETICA	BELLMONTE II MADERA							
21	4100050121	PERNO DIENTE RETENCION PAVONA.		●	●	●	●	●	●	●	●	●							
22	4100050122	PERNO ELEVADOR PAVONADO		●	●	●	●	●	●	●	●	●							
23	4100000123	ANILLO ELASTICO PERNO ELEVADOR		●	●	●	●	●	●	●	●	●							
24	4100050124	GATILLO TRINQUETE PAVONADO		●	●	●	●	●	●	●	●	●							
25	4100000125	RESORTE ELEVADOR		●	●	●	●	●	●	●	●	●							
26	4100050126	PERNO GUIA RT/OBT. PAVO.(HORQ)		●	●	●	●	●	●	●	●	●							
27	3100050127	SUBGR. DIENTE R. OBT. PAVONADO		●	●	●	●	●	●	●	●	●							
29	2120000100	GRUPO GUARDA ANODIZADA DIESTRO ALUMINIO						●											
29	2120061100	GRUPO GUARDA ANODIZADA ZURDO ALUMINIO						●											
29	2120400100	GRUPO GUARDA SINTÉTICA DIESTRO		●	●	●	●		●	●	●	●							
29	2120461100	GRUPO GUARDA SINTÉTICA ZURDO		●	●	●	●		●	●	●	●							
64	4100000314	PASADOR ELASTICO GUARDA		●	●	●	●	●	●	●	●	●							

PASION-PREMIUM-BELLMONTE

SL 80 - PASIÓN - PREMIUM - PREMIUM PLUS - BELLMONTE

TRIGGER GUARD GROUP

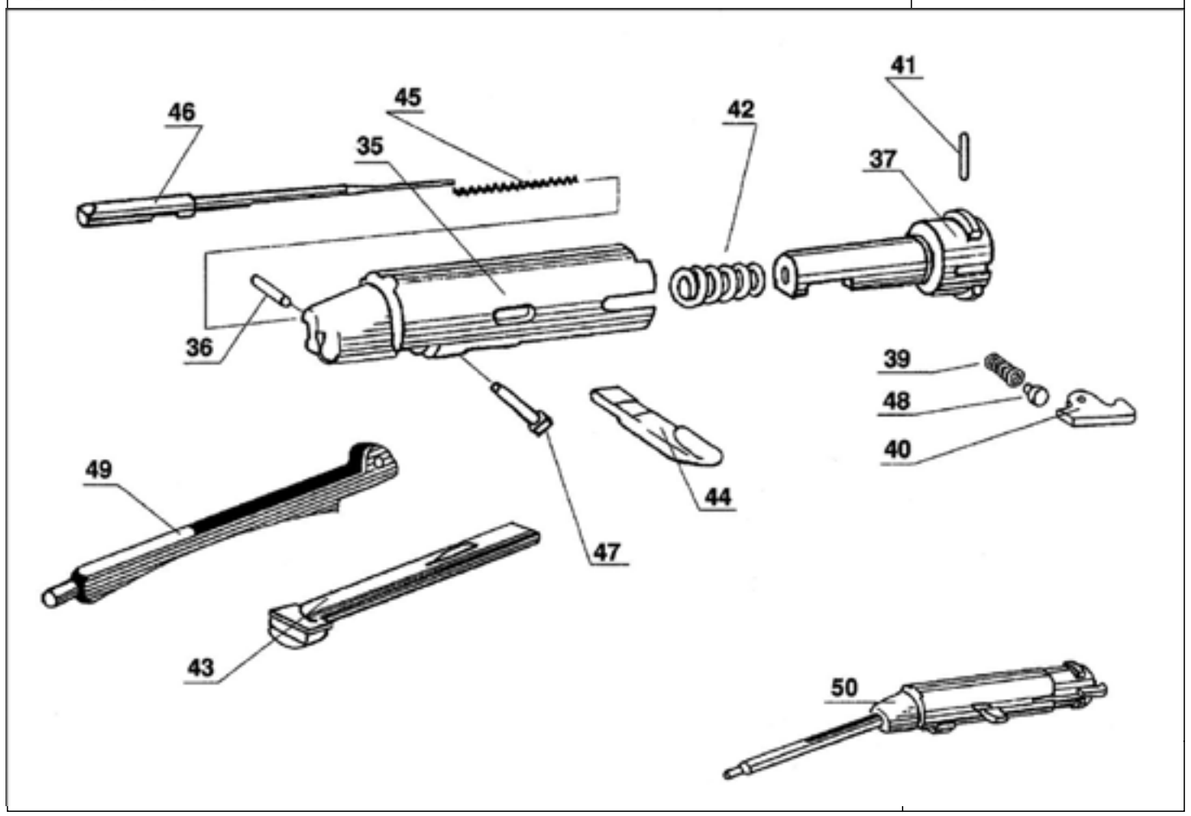

07.02

N.Pos	Código Proveedor	Descripción		PREMIUM P. MADERA	PREMIUM P. SUPERLIGERA	PREMIUM P. CAMO	PREMIUM P. SINTETICA	PASIÓN	BELLMONTE I MADERA	BELLMONTE I CAMO	BELLMONTE I SINTETICA	BELLMONTE II MADERA							
35	4120050200	OBTURADOR ABRILLANTADO		●	●			●				●							
35	4110051200	OBTURADOR PAVONADO				●	●		●	●	●								
36	4100050202	PASADOR BIELA PAVONADO		●	●	●	●	●	●	●	●	●							
37	4110050203	CABEZA ABRILLANTADO FRONTAL		●	●	●	●	●	●	●	●	●							
39	4100000143	MUELLE EXTRACTOR		●	●	●	●	●	●	●	●	●							
40	4100050205	EXTRACTOR PAVONADO		●	●	●	●	●	●	●	●	●							
41	4100000206	PASADOR ELASTICO		●	●	●	●	●	●	●	●	●							
42	4100000207	MUELLE RECUPERADOR OBTURADOR		●	●	●	●	●	●	●	●	●							
43	4100050208	TALON CROMADO		●	●	●	●	●	●	●	●	●							
44	4120050209	MANETA ABRILLANTADA		●	●			●				●							
44	4110051209	MANETA PAVONADO				●	●		●	●	●								
45	4100000210	MUELLE PERCUTOR		●	●	●	●	●	●	●	●	●							
46	4100050211	PERCUTOR ABRILLANTADO		●	●	●	●	●	●	●	●	●							
47	4100050212	PERNO RETENC. PERCUTOR PAVONA.		●	●	●	●	●	●	●	●	●							
48	4100050213	GUIA RESORTE PAVONADO		●	●	●	●	●	●	●	●	●							
49	4100050217	BIELA PAVONADA		●	●	●	●	●	●	●	●	●							
50	2120000200	CONJUNTO OBTURADOR		●	●	●	●	●	●	●	●	●							

PASION-PREMIUM-BELLMONTE

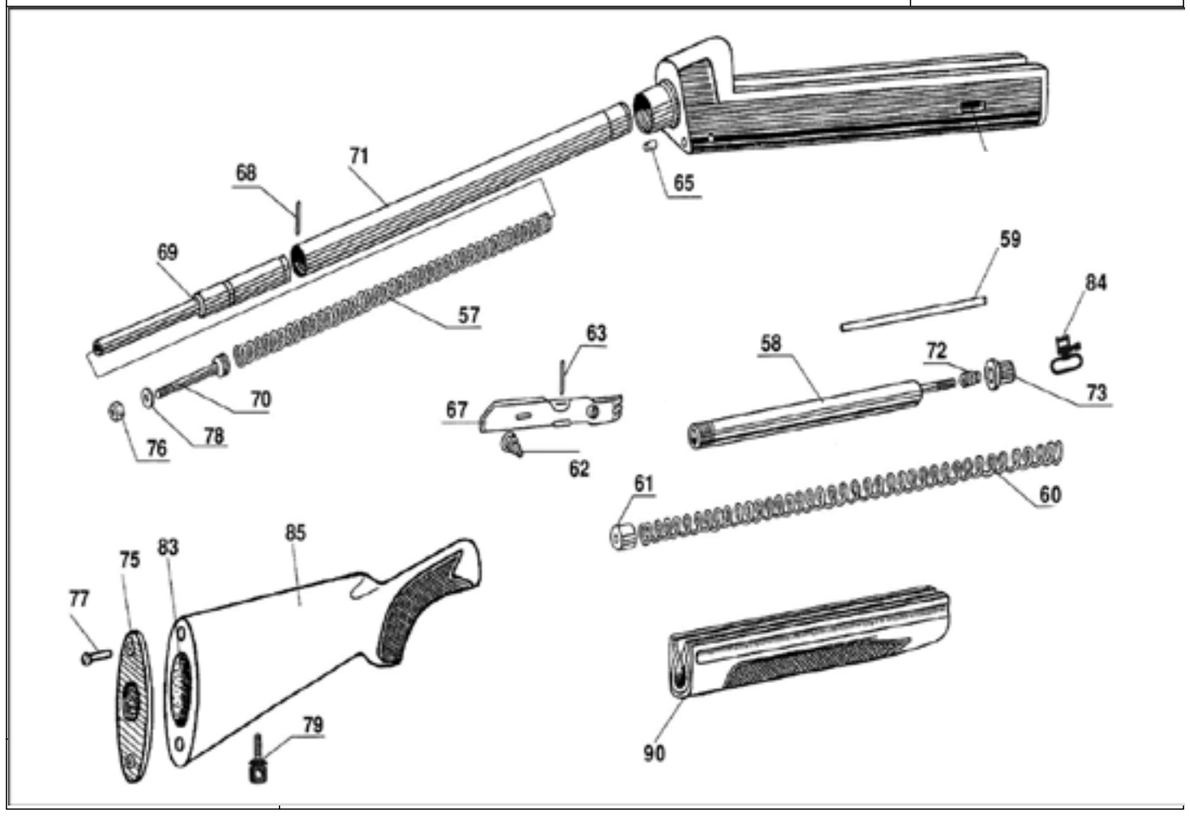

07.08

N.Pos	Código Proveedor	Descripción		PREMIUM P. MADERA	PREMIUM P. SUPERLIGERA	PREMIUM P. CAMO	PREMIUM P. SINTÉTICA	PASIÓN	BELLMONTE I MADERA	BELLMONTE I CAMO	BELLMONTE I SINTÉTICA	BELLMONTE II MADERA						
57	4100000302	MUELLE TUBO GUIA (58144)		●	●	●	●	●	●	●	●	●						
58	4100050306	TUBO ALMACEN ALU REDUCIDO ANOD		●	●	●	●	●	●	●	●	●						
58	4100050305	TUBO ALMACEN ALUMINIO ANODIZ.		●	●	●	●	●	●	●	●	●						
59	4100050345	VARILLA REDUCTORA		●	●	●	●	●	●	●	●	●						
60	4100000307	MUELLE TUBO ALMACEN		●	●	●	●	●	●	●	●	●						
61	4100050309	CASQUETE IMPULSOR PAVONADO		●	●	●	●	●	●	●	●	●						
62	4100000311	RESORTE LEVA		●	●	●	●	●	●	●	●	●						
63	4100050313	PASADOR LEVA D/PAVONAR		●	●	●	●	●	●	●	●	●						
65	4100050330	PITONES GUIA PAVONADO		●	●	●	●	●	●	●	●	●						
66	4120000335	CUÑA CURVATURA 50 PREMIUM / PASION		●	●			●										
66	4120000336	CUÑA CURVATURA 60 PREMIUM / PASION		●	●			●										
66	4129000335	CUÑA CURVATURA 50 BELLMONTE II										●						
66	4129000336	CUÑA CURVATURA 60 BELLMONTE II										●						
67	3100050338	SUBGR. LEVA PAV. Y CALIBR.		●	●	●	●	●	●	●	●	●						
68	4100000339	PASADOR TAPON TUBO GUIA		●	●	●	●	●	●	●	●	●						
69	4100050362	GUIA MUELLE BIELA PAVONADA		●	●	●	●	●	●	●	●	●						
70	4100000363	TAPON TUBO GUIA		●	●	●	●	●	●	●	●	●						
71	4100050366	TUBO GUIA ANODIZADO		●	●	●	●	●	●	●	●	●						
72	4100000320	MUELLE CASQUETE		●	●	●	●	●	●	●	●	●						
73	4120054318	CASQUETE PORTAC.CAMO MAX4				●												
73	3100050318	SUBG. CASQUETE CONICO CON PORTC.		●	●		●											
73	3100050319	SUBG. CASQUETE CONICO PORTC. PLUS		●	●		●											
73	3120150809	SUBG. CASQUETE PORTC. PASION CIL.						●										
73	3109000648	SUBG. CASQUETE PORTC. PLUS BLMONT							●	●	●	●						
74	4100000354	BUSSOLE (G-50354)-(CASQUILLO)		●	●	●	●	●	●	●	●	●						

PASION-PREMIUM-BELLMONTE

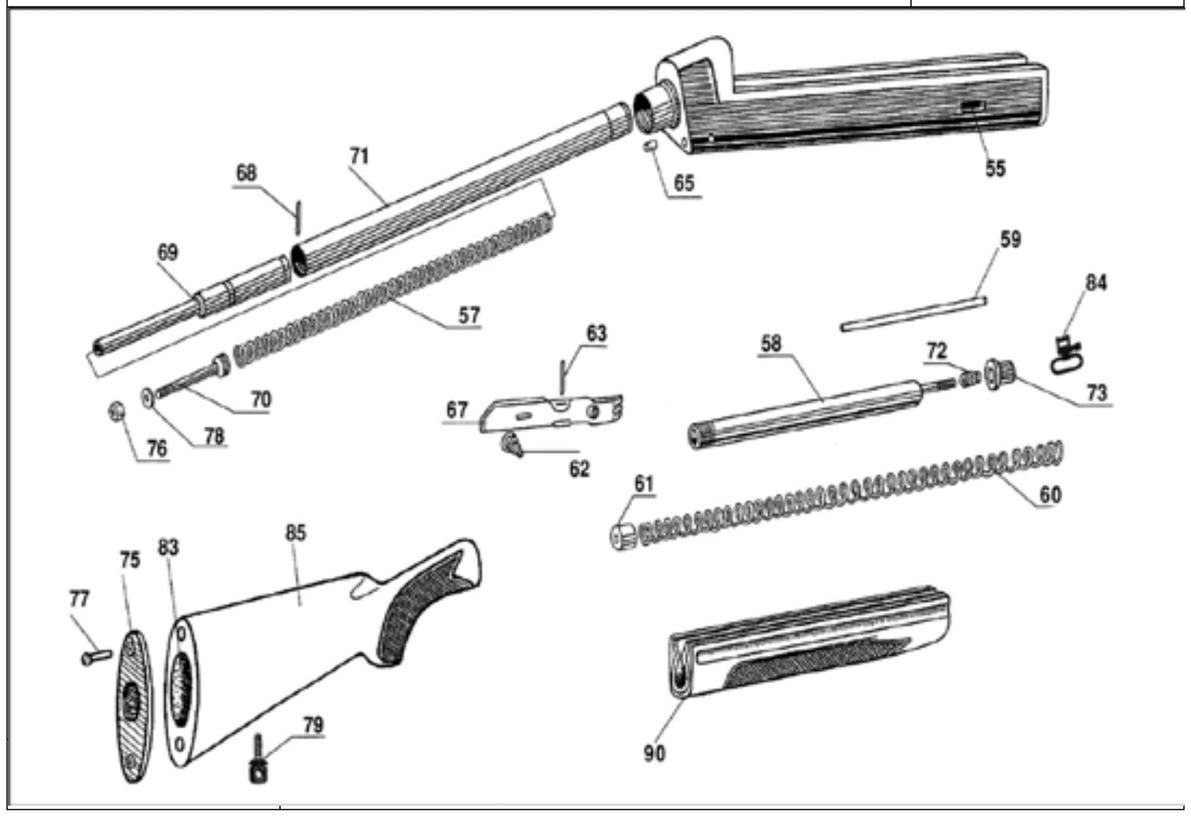

07.08

N.Pos	Código Proveedor	Descripción		PREMIUM P. MADERA	PREMIUM P. SUPERLIGERA	PREMIUM P. CAMO	PREMIUM P. SINTÉTICA	PASIÓN	BELLMONTE I MADERA	BELLMONTE I CAMO	BELLMONTE I SINTÉTICA	BELLMONTE II MADERA						
75	4120050721	CANTONERA GOMA 19mm. NEUTRA. 80.				●	●				●	●						
75	4120050722	CANTONERA BENELLI PRE.PLUS / BLMT 20,5mm. 95		●	●				●			●						
75	4120050723	CANTONERA BENELLI PRE.PLUS / BLMT 20,5mm. 80				●	●			●	●							
75	4120150722	CANTONERA BENELLI PRE.PLUS / BLMT 12,5mm. 95		●	●				●			●						
75	4120150723	CANTONERA BENELLI PRE.PLUS / BLMT 12,5mm. 80				●	●			●	●							
75	4100150722	CANTONERA NEUTRA PRE.PLUS / BLMT 12,5mm. 95		●	●				●			●						
75	4100150723	CANTONERA NEUTRA PRE.PLUS / BLMT 12,5mm. 80				●	●			●	●							
76	4100000324	TUERCA FIJACION CULATA		●	●	●	●	●	●	●	●	●						
77	4110050000	TIRAFONDOS		●	●	●	●	●	●	●	●	●						
78	4100000329	ARANDELA TORNILLO FIJ. CULATA		●	●	●	●	●	●	●	●	●						
79	4030050078	TORNILLO PORTACORREAS PAVONADO		●	●	●	●	●	●	●	●	●						
79	3100050948	SUBGR. PORTACORREAS CULATA (Con anilla portc.)		●	●	●	●	●	●	●	●	●						
80	4100000315	PITON RETENCION CASQUETE					●				●							
81	4100000316	MUELLE RETENC. PITON CASQUETE					●				●							
82	4220000317	TORNILLO FIJACION AGUJA sintetyc					●				●							
83	4120050331	CHAPA CURVATURA 50		●	●							●						
83	4120050332	CHAPA CURVATURA 55		●	●			●	●			●						
83	4120050333	CHAPA CURVATURA 60		●	●							●						
84	4030000027	PORTACORREAS PAVONADO		●	●	●	●	●	●	●	●	●						

PASION-PREMIUM-BELLMONTE

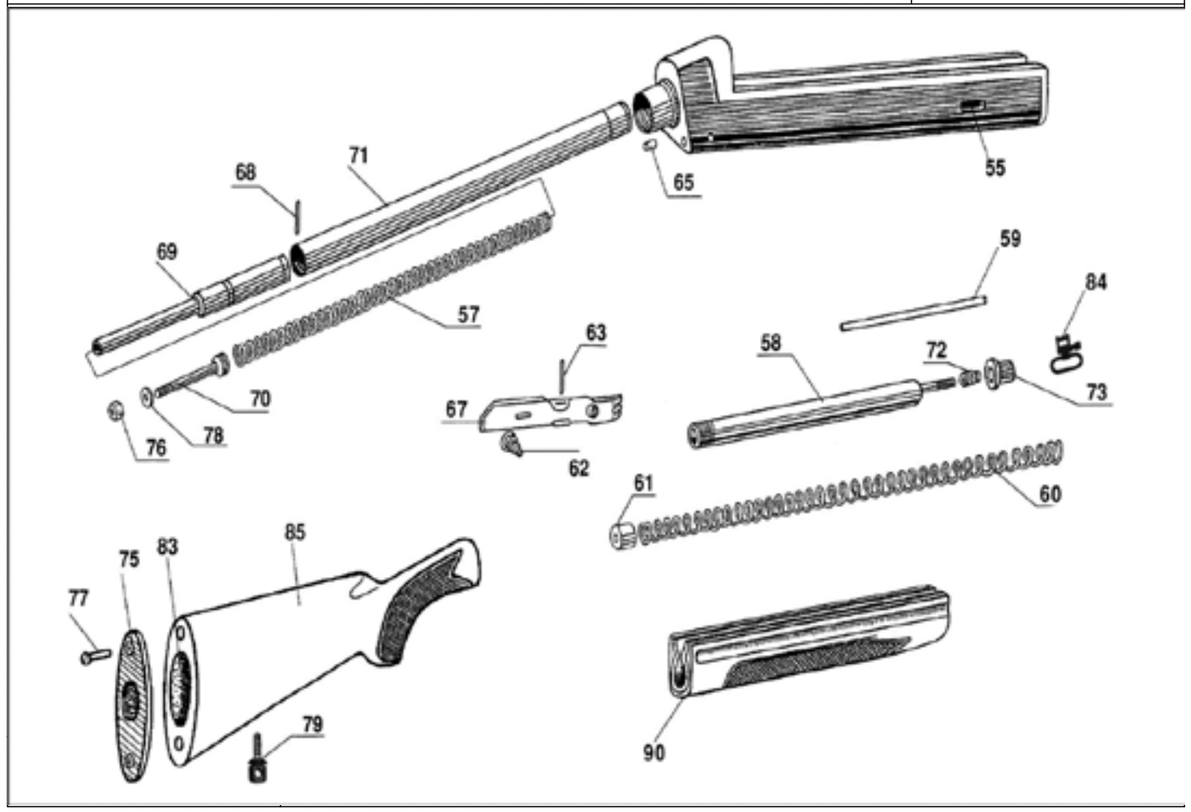

07.08 CULATA Y GUARDAMANOS MADERA Y CAMO

N.Pos	Código Proveedor	Descripción		PREMIUM P. MADERA	PREMIUM P. SUPERLIGERA	PREMIUM P. CAMO	PREMIUM P. SINTÉTICA	PASIÓN	BELLMONTE I MADERA	BELLMONTE I CAMO	BELLMONTE I SINTÉTICA	BELLMONTE II MADERA						
85	3111305900	CULATA STD CAMO PREMIUM. (SIN CANT. NI PORTC)				●												
85	3109154900	CULATA STD CAMO BLMONT. (SIN CANT. NI PORTC)								●								
90	3111350901	GUARDAMANOS CAMO PREMUM				●												
90	3109154901	GUARDAMANOS CAMO BELLMONTE								●								
85	3120550155	CULATA PREMIUM PLUS SUPERLIGERA			●													
90	3120550321	GUARDAMANOS PREMIUM PLUS SUPERLIGERA			●													
85	3120450155	CULATA PREMIUM PLUS		●														
90	3120450321	GUARDAMANOS PREMIUM PLUS		●														
85	3120300155	CULATA GR3 EN ACEITE						●										
90	4120300321	GUARDAMANOS GR3 EN ACEITE						●										
85	3129400155	CULATA BLMONT I.							●									
90	2129400321	GUARDAMANOS BLMONT I.							●									
85	3129500155	CULATA BLMONT II.										●						
90	2129500321	GUARDAMANOS BLMONT II.										●						

PASION-PREMIUM-BELLMONTE

CULATA Y GUARDAMANOS SINTÉTICA

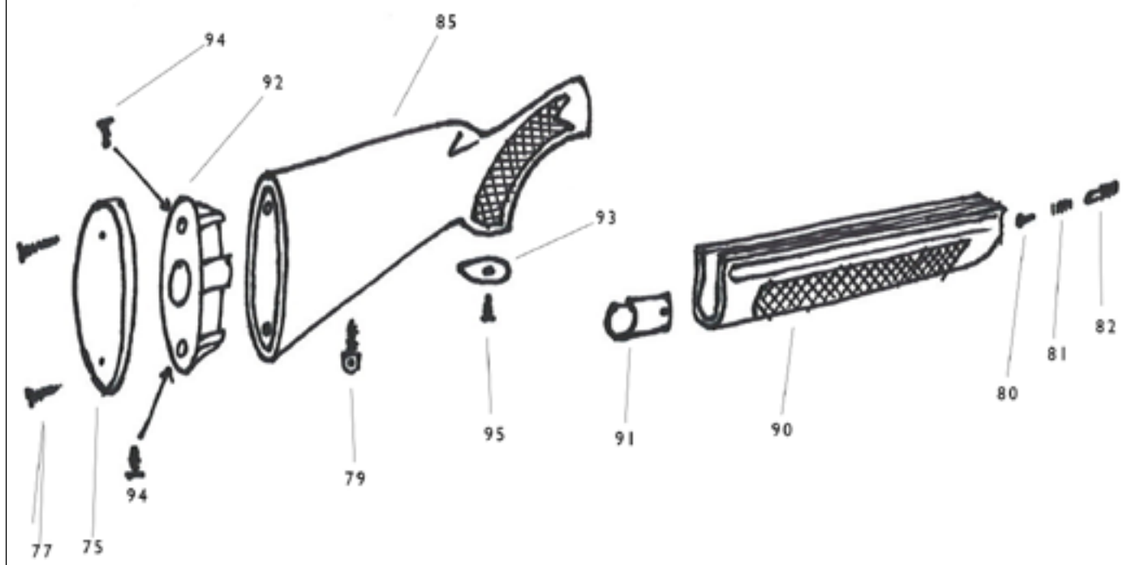

07.08

N.Pos	Código Proveedor	Descripción		PREMIUM P. MADERA	PREMIUM P. SUPERLIGERA	PREMIUM P. CAMO	PREMIUM P. SINTÉTICA	PASIÓN	BELLMONTE I MADERA	BELLMONTE I CAMO	BELLMONTE I SINTÉTICA	BELLMONTE II MADERA						
85	4110400900	CULATA STD SINTÉTICA PREMIUM. (SIN CANT. NI PORTC)					●											
85	4109100900	CULATA STD SINTETICA BLMONT. (SIN CANT. NI PORTC)									●							
90	4110400901	GUARDAMANOS STD SINTÉTICO PREMIUM.					●											
90	4109100901	GUARDAMANOS STD SINTÉTICO BLMONT.									●							
91	4110000904	CASQUILLO GUARDAMANOS					●				●							
92	4110000903	POSTIZO CULATA					●				●							
93	4110000905	TAPA PISTOLET					●				●							
94	4110000906	TORNILLO ROSCA CHAPA 3,9 X 16					●				●							
95	4110000908	TORNILLO ROSCA CHAPA CABEZA					●				●							
80	4100000315	PITON RETENCION CASQUETE					●				●							
81	4100000316	MUELLE RETENC. PITON CASQUETE					●				●							
82	4220000317	TORNILLO FIJACION AGUJA sintetyc					●				●							
	4120000408	PUNTO DE MIRA ACERO C.12																
	3120051408	PUNTO DE MIRA LUMINOSO CAL. 20/28																
	4130050514	PUNTO DE MIRA LUMINSO LPA C.12																
	3120000028	ALZA REGULABLE SLUG C.12																
	3110050391	PUNTO DE MIRA SLUG H 6,5 C.12																
	4120051408	PUNTO DE MIRA SLUG LUMINOSO H 6 C.12																

PASION-PREMIUM-BELLMONTE

10

VINCI - SUPERVINCI

VINCI - SUPERVINCI	DRWG. 1	TRIGGER GUARD GROUP

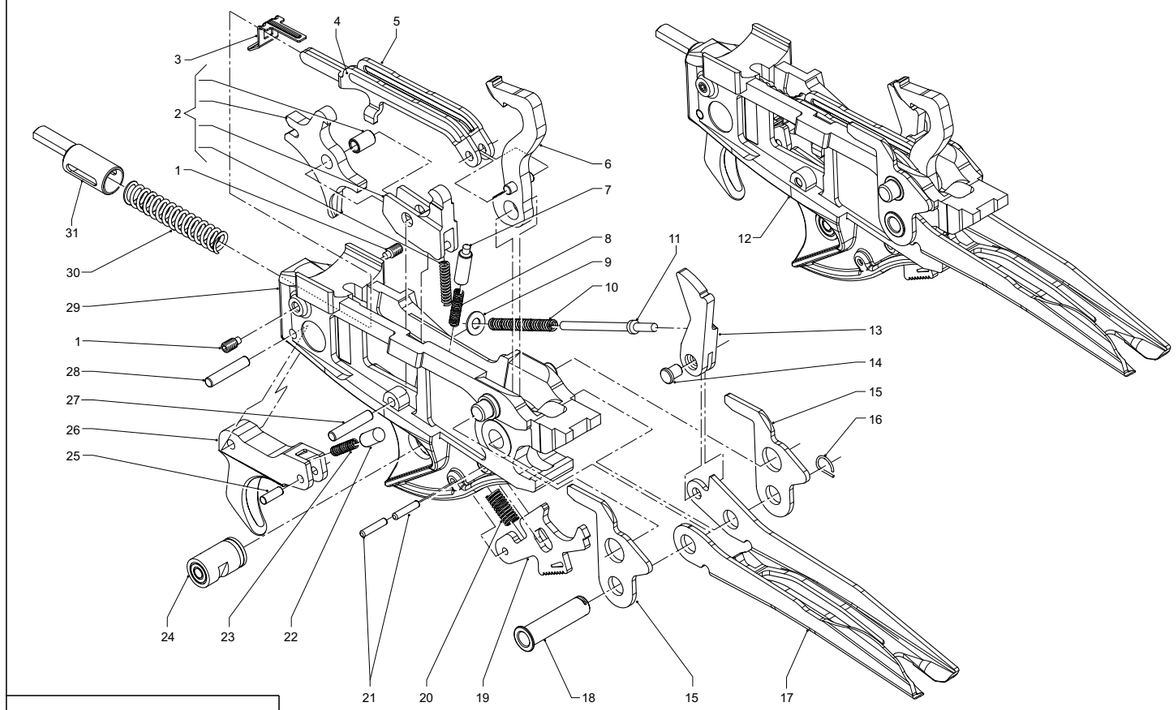

LEGEND
● = Original piece installed on standard model

10.02

No. Pos.	Código Manual	Código Proveedor	Descripción	P.Neto €	VINCI - SUPERVINCI																				
					Vinci	SuperVinci																			
1	403V	90020300	Stroke-end grub screw (hammer spring cap)		●	●																			
2	443X	F0274500	Disconnector assembly		●	●																			
3	215V	G0277500	Disconnector		●	●																			
4	281W	G0182300	Hammer link (R.H.)		●	●																			
5	444W	G0182401	Hammer link (L.H.)		●	●																			
6	002X	G0514500	Hammer		●																				
6	S002	G0540100	Hammer			●																			
7	008W	G0191400	Safety plunger pin		●	●																			
8	046J	G0128100	Safety spring		●	●																			
9	243F	90010200	Washer		●	●																			
10	021J	G0124200	Carrier spring		●	●																			
11	022A	G0004301	Bolt latch pin		●	●																			
12	001X	F0274600	Trigger group assembly		●																				
12	S001	F0294000	Trigger group assembly			●																			
13	019X	G0514700	Bolt stop tooth		●	●																			
14	020A	G0003900	Bolt stop tooth pin		●	●																			
15	425X	G0513901	Carriage fixing plate		●	●																			
16	018A	G0032300	Trigger guard pin spring		●	●																			
17	017X	G0514900	Carrier		●																				
17	S017	G0540200	Carrier			●																			
18	016X	G0514200	Trigger pin bush		●	●																			
19	076X	G0514600	Cartridge drop lever		●	●																			
20	077X	G0513800	Cartridge drop lever spring		●	●																			
21	426X	90029300	Cartridge drop lever rotating pin		●	●																			
22	024P	G0040601	Trigger spring bush		●	●																			
23	011X	G0515100	Trigger spring		●	●																			
24	013V	G0270700	Safety button		●																				
24	S013	G0540700	Safety button			●																			
25	285W	90013800	Disconnector trigger roller		●	●																			
26	009X	G0514100	Trigger		●	●																			
27	010L	90008800	Pin		●	●																			
28	129Q	90002400	Pin		●	●																			
29	014X	G0514801	Trigger guard		●	●																			
30	004X	G0515200	Hammer spring		●	●																			
31	003X	G0514000	Hammer spring cap		●	●																			

VINCI - SUPERVINCI | DRWG. 2 | BOLT GROUP

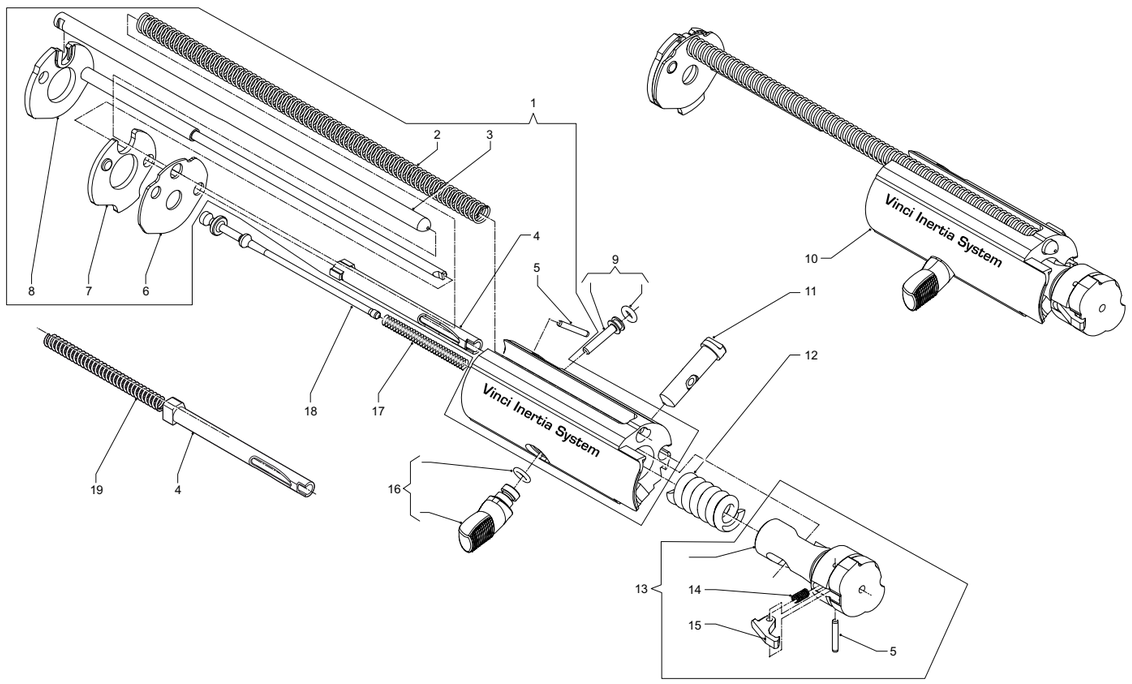

LEGEND
● = Original piece installed on standard model

10.04

No. Pos.	Código Manual	Código Proveedor	Descripción	P.Neto €	VINCI - SUPERVINCI	
					Vinci	SuperVinci
1	026X	F0289800	Polished bolt assembly, partial		●	
1	026X	F0274101	Mat bolt assembly, partial		●	
1	S026	F0294300	Bolt assembly, partial			●
2	100X	G0511400	Inertia spring		●	●
3	438X	G0511900	Bolt spring plunger pin		●	
3	S438	G0541000	Bolt spring plunger pin			●
4	168X	G0511600	Ejector frame		●	
4	S168	G0540800	Ejector frame			●
5	035X	90029600	Extractor pin		●	●
6	439X	G0511100	Bolt shoulder-plate		●	●
7	440X	G0511500	Bolt stroke-end rubber insert		●	●
8	441X	G0511700	Full ejector guide pin		●	
8	S441	G0540900	Full ejector guide pin			●
9	028A	F0004501	Firing pin retaining pin		●	●
10	024X	F0290000	Bolt assembly, polished		●	
10	024X	F0274201	Bolt assembly, mat		●	
10	S024	F0294400	Bolt assembly			●
11	031X	G0512000	Locking head pin		●	●
12	036A	G0032901	Inertia spring		●	●
13	165X	F0273900	Locking head assembly		●	●
14	033J	G0126900	Extractor spring		●	●
15	034A	G0004901	Extractor		●	●
16	030X	F0274000	Bolt handle		●	●
17	037A	G0033101	Firing pin spring		●	●
18	025X	G0512100	Firing pin		●	
18	S025	G0540500	Firing pin			●
19	S046	G0540600	Ejector spring			●

VINCI - SUPERVINCI

VINCI - SUPERVINCI | DRWG. 3 | CARRIAGE GROUP

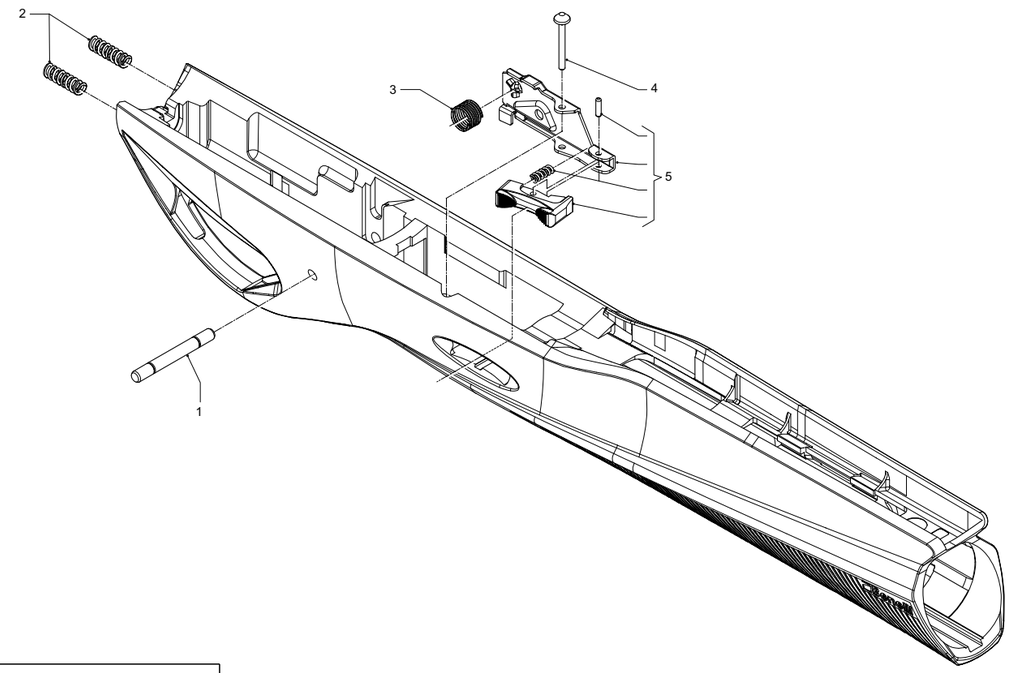

LEGEND
● = Original piece installed on standard model

10.06

No. Pos.	Código Manual	Código Proveedor	Descripción	P.Neto €	VINCI - SUPERVINCI	
					Vinci	SuperVinci
1	015X	G0516300	Trigger guard pin		●	●
2	437X	G0516200	Carriage play recovery spring		●	●
3	058J	G0126200	Carrier latch spring		●	●
4	056X	G0516400	Carrier latch pin		●	●
5	057X	F0275000	Carrier latch		●	
5	S057	F0294100	Carrier latch			●

VINCI - SUPERVINCI

VINCI - SUPERVINCI | DRWG. 4 | BARREL GROUP

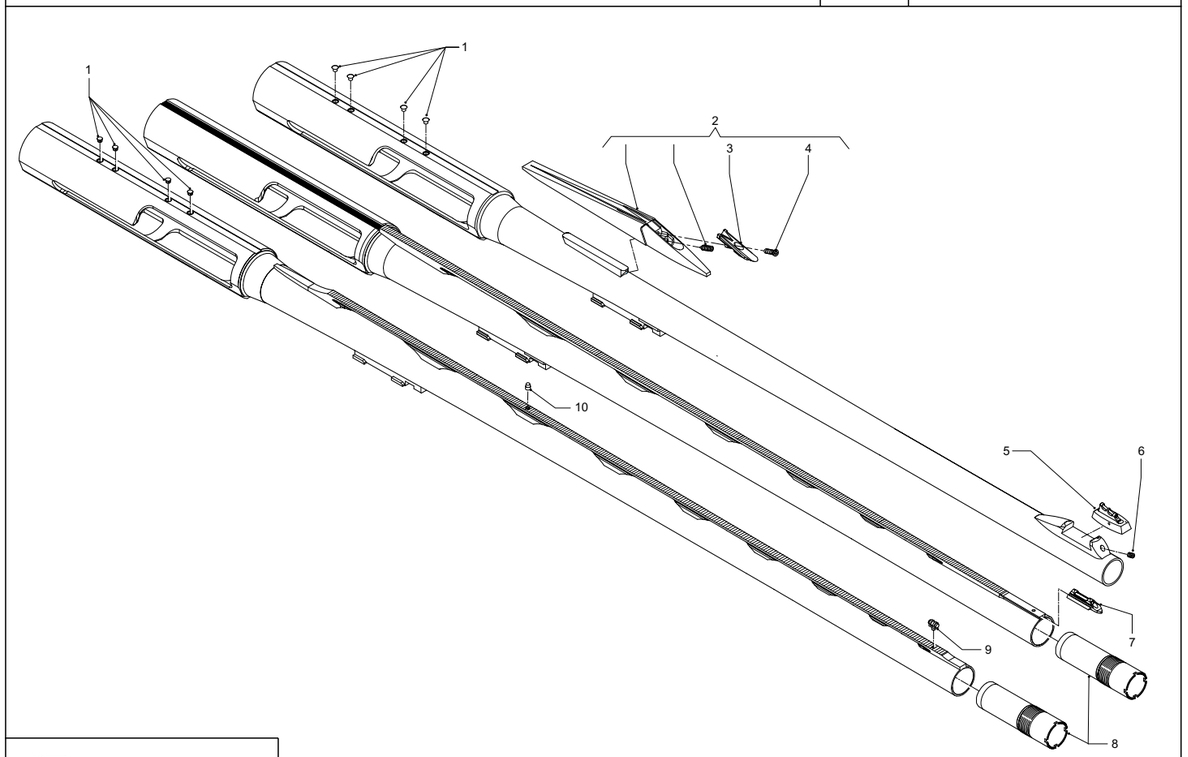

LEGEND
● = Original piece installed on standard model

10.08

No. Pos.	Código Manual	Código Proveedor	Descripción	P.Neto €	VINCI - SUPERVINCI																				
					Vinci	SuperVinci																			
1	294K	G0299400	Cap/plug for cover holes		●	●																			
2	293X	F0315500	Complete rib assembly		●																				
3	469W	G0539600	Rib fiber optic support		●																				
4	470W	90030200	Fixing screw for fiber optic support		●																				
5	110X	F0315600	Adjustable front-sight assembly		●																				
6	071A	90015100	Grub		●																				
7	447X	G0534300	Front sight		●																				
8	213G		nternal choke (see accessories)		●	●																			
9	044X	G0511000	Front sight		●	●																			
10	153A	G0021500	Intermediate sight		●	●																			

VINCI - SUPERVINCI

VINCI - SUPERVINCI | DRWG. 5 | MAGAZINE GROUP

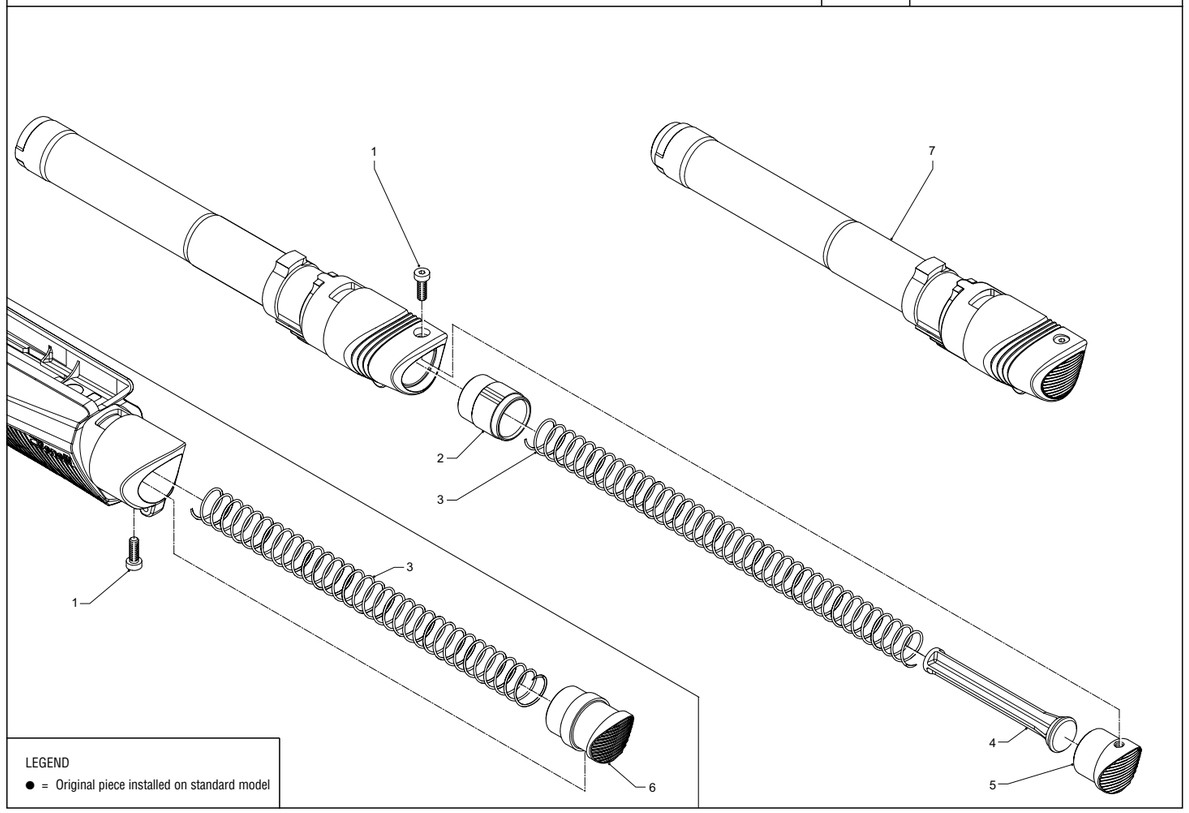

LEGEND
● = Original piece installed on standard model

10.10

No. Pos.	Código Manual	Código Proveedor	Descripción	P.Neto €	VINCI - SUPERVINCI																				
					Vinci	SuperVinci																			
1	433X	90029100	Plug tube magazine fixing screw		●	●																			
2	065X	G0515900	Magazine follower		●	●																			
3	064D	G0047601	Magazine spring		●	●																			
4	158X	G0515600	Shot plug (3 rounds)		●	●																			
5	068X	G0515800	Magazine tube plug M265		●	●																			
6	448X	G0519500	Magazine tube plug M245		●	●																			
7	432X	F0274700	Magazine tube M265, assembly (3 rounds)		●	●																			
7	432X	F0301200	Magazine tube M395, assembly (5 rounds)		●	●																			
7	432X	F0293700	Magazine tube M515, assembly (7 rounds)		●	●																			
7	432X	F0293800	Magazine tube M640, assembly (9 rounds)		●	●																			

VINCI - SUPERVINCI

VINCI - SUPERVINCI	DRWG. 6	STOCK GROUP

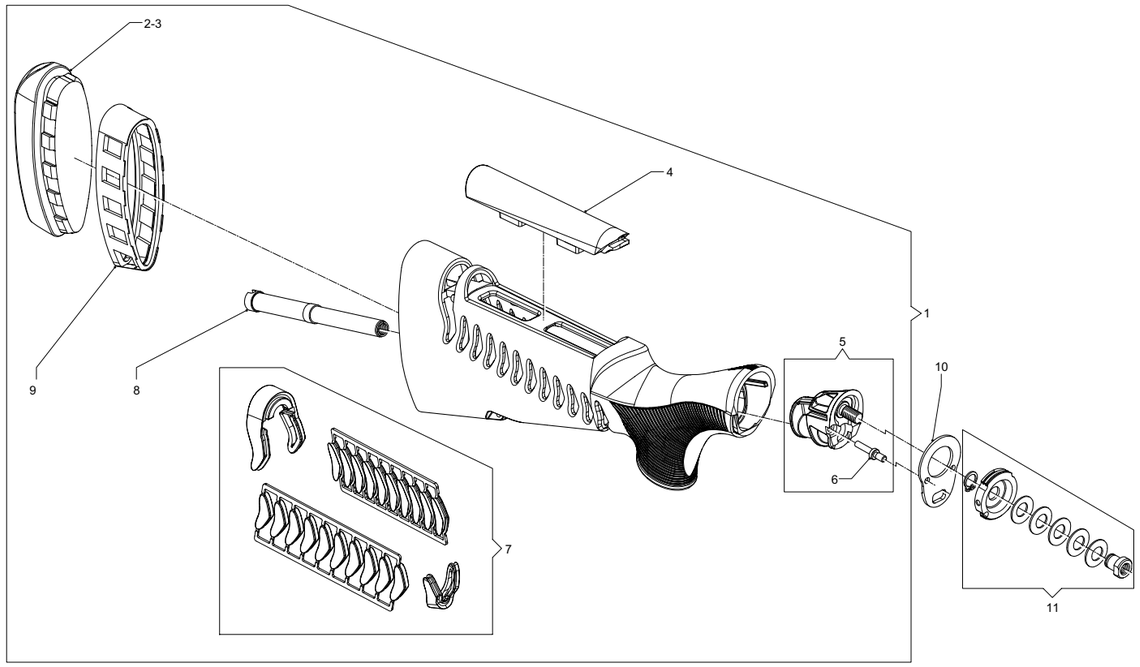

LEGEND
● = Original piece installed on standard model

10.12

No. Pos.	Código Manual	Código Proveedor	Descripción		VINCI - SUPERVINCI	
					Vinci	SuperVinci
1	388X	F0274400	Stock assembly Comfort mm 360 (R.H.) with butt plate		●	●
2	387X	G0513500	Butt plate (R.H.) medium		●	●
3	430X	G0510800	Butt plate (L.H.)		●	●
4	380X	G0512600	Comb, Comfort stock, low		●	●
4	380X	G0535400	Comb, Comfort stock, medium		●	●
5	429X	G0513401	Front spacer Comfort stock assembly		●	●
6	473X	G0527600	Stock retaining pin		●	●
7	379X	F0142800	Chevrons assembly, Comfort stock		●	●
8	428X	G0521101	Tension rod, Comfort stock		●	●
9	445G	G0214900	Butt plate ring		●	●
10	147X	G0513000	Drop change plate, deviation 50		●	●
10	147X	G0513100	Drop change plate, deviation 55		●	●
10	147X	G0513200	Drop change plate, deviation 60		●	●
10	147X	G0513300	Drop change plate, deviation 64		●	●
11	427X	F0274300	Stock locking ring nut assembly		●	●

20

NOVA
NOVA
CAMO
NOVA 20
CAMO 20

SUPERNOVA
SUPERNOVA
TACTICAL
CAMO

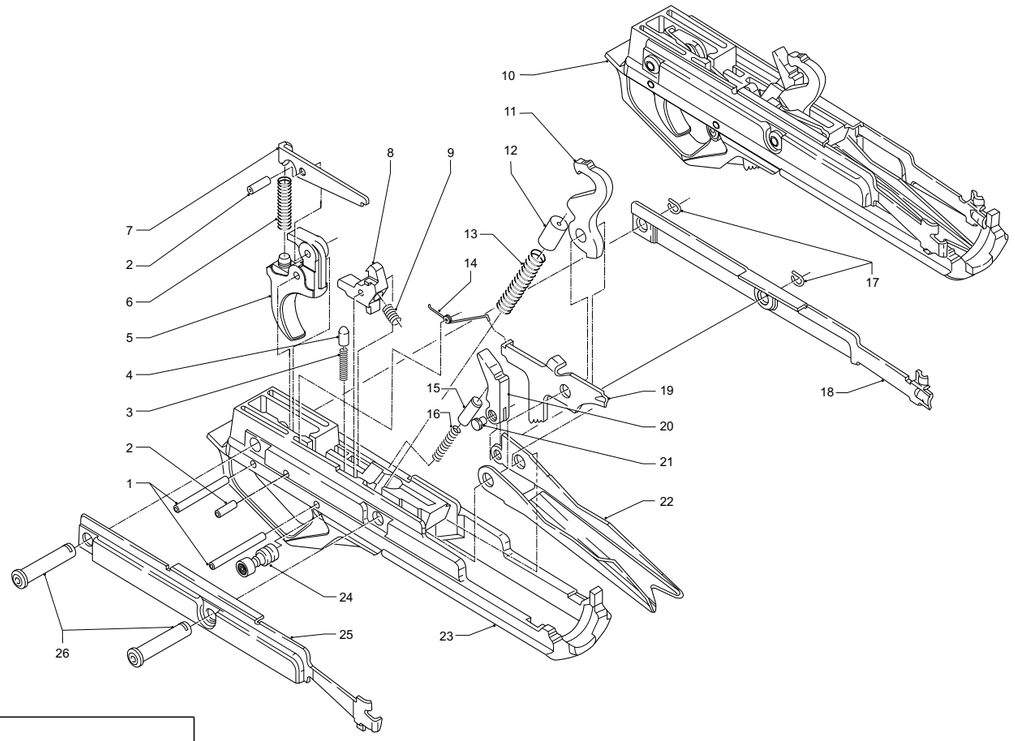

LEGEND
● = Original piece installed on standard model

20.02

No. Pos.		Código Proveedor	Descripción	P. Neto €	NOVA				SUPERNOVA		
					Nova	Camo	Nova 20	Camo 20	SuperNova	Tactical	Camo
1	010N	90010400	Trigger pin		●	●			●	●	●
1	010T	90012300	Trigger pin				●	●			
2	216N	90009900	Disconnector plunger		●	●	●	●	●	●	●
3	007A	G0032001	Safety plunger spring		●	●	●	●	●	●	●
4	008A	G0054200	Hand safety plunger		●	●	●	●	●	●	●
5	009N	G0111900	Trigger		●	●	●	●			
5	009S	G0261200	Trigger						●	●	●
6	011N	G0114400	Trigger spring		●	●	●	●	●	●	●
7	215N	G0111600	Disconnector		●	●	●	●	●	●	●
8	217N	G0113200	Disconnector hammer		●	●	●	●	●	●	●
9	218N	G0114600	Disconnector hammer spring		●	●	●	●	●	●	●
10	001N	F0039300	Trigger group assembly		●						
10	001N	F0114700	Trigger group assembly Camo MAX4			●					
10	001N	F0056001	Trigger group assembly Camo TMB			●					
10	001S	F0141400	Trigger group assembly						●	●	
10	001S	F0141600	Trigger group assembly Camo MAX4								●
10	001S	F0141500	Trigger group assembly Camo TMB								●
10	001T	F0080700	Trigger group assembly				●				
10	001T	F0081500	Trigger group assembly Camo TMB					●			
11	002N	G0113100	Hammer		●	●	●	●	●	●	●
12	003A	G0000101	Hammer spring cap		●	●	●	●	●	●	●
13	004N	G0114500	Hammer spring		●	●	●	●	●	●	●
14	220N	G0114700	Breech bolt latch spring		●	●	●	●	●	●	●
15	221N	G0112500	Bolt stop cap		●	●	●	●	●	●	●
16	021N	G0113600	Carrier spring		●	●	●	●	●	●	●
17	018A	G0032300	Trigger guard pin spring		●	●	●	●	●	●	●
18	214N	G0113500	Carrier latch (L.H.)		●	●			●	●	●
18	214T	G0140000	Carrier latch (L.H.)				●	●			
19	219N	G0111500	Breech bolt latch		●	●			●	●	●
19	219T	G0175600	Breech bolt latch				●	●			
20	019N	G0112100	Bolt stop tooth		●	●			●	●	●
20	019T	G0139600	Bolt stop tooth				●	●			

NOVA - SUPERNOVA

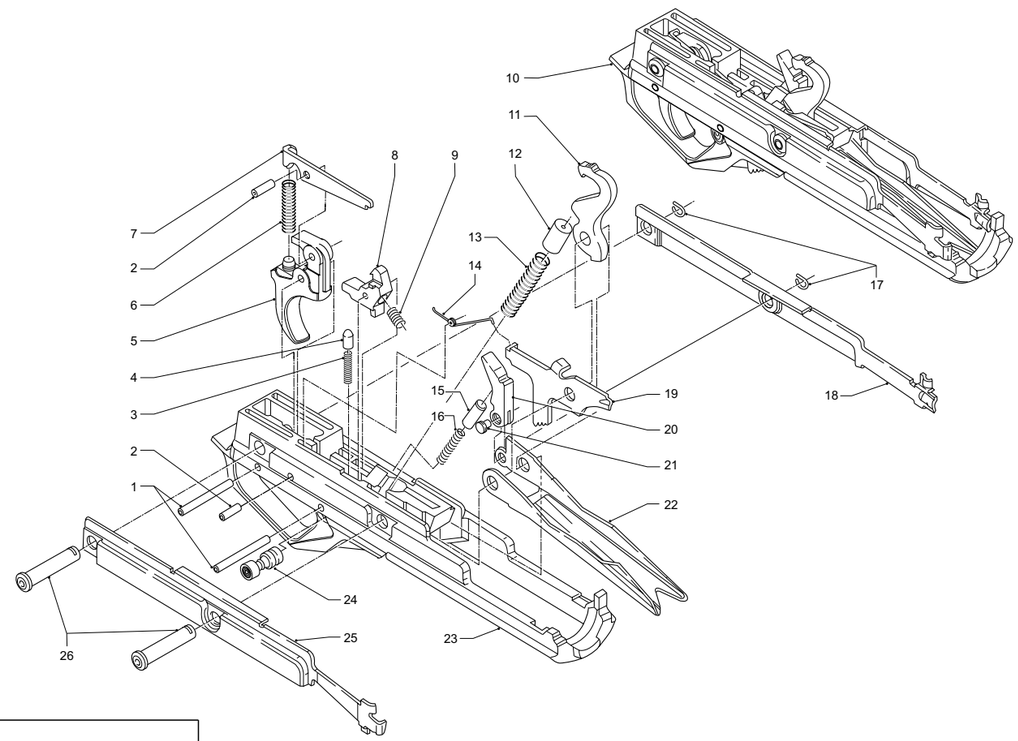

LEGEND
● = Original piece installed on standard model

20.04

No. Pos.	Código Manual	Código Proveedor	Descripción	P. Neto €	NOVA				SUPERNOVA		
					Nova	Camo	Nova 20	Camo 20	SuperNova	Tactical	Camo
21	020A	G0003900	Bolt stop tooth pin		●	●			●	●	●
21	020T	G0164700	Bolt stop tooth pin				●	●			
22	017N	G0113300	Carrier		●	●			●	●	●
22	017T	G0139800	Carrier				●	●			
23	014N	G0081600	Trigger guard		●						
23	014N	G0221500	Trigger guard Camo MAX4			●					
23	014N	G0119401	Trigger guard Camo TMB			●					
23	014S	G0260200	Trigger guard						●	●	
23	014S	G0260400	Trigger guard Camo MAX4								●
23	014S	G0260300	Trigger guard Camo TMB								●
23	014T	G0137800	Trigger guard				●				
23	014T	G0168200	Trigger guard Camo TMB					●			
24	013C	G0000300	Hand safety button				●	●			
24	013N	G0112300	Hand safety button		●	●					
24	013S	G0261300	Hand safety button						●	●	●
25	222N	G0113400	Carrier latch (R.H.)		●	●			●	●	●
25	222T	G0139900	Carrier latch (R.H.)				●	●			
26	016N	G0112600	Trigger pin bush		●	●			●	●	●
26	016T	G0139700	Trigger pin bush				●	●			

NOVA - SUPERNOVA

NOVA - SUPERNOVA | DRWG. 2 | BOLT GROUP

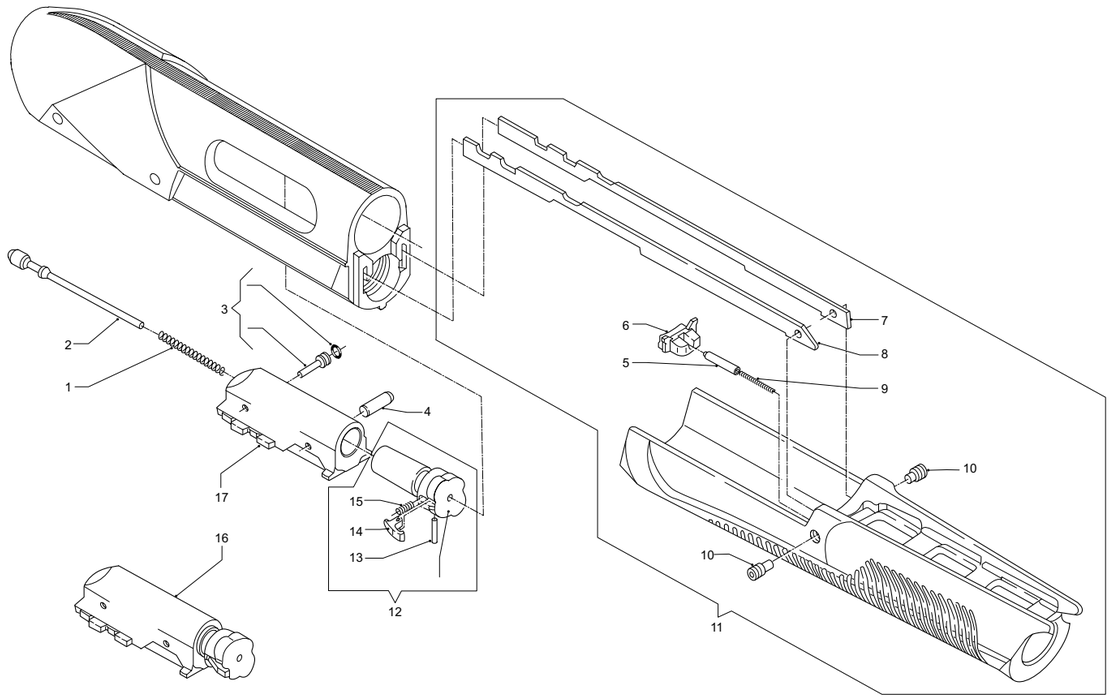

LEGEND
● = Original piece installed on standard model

20.06

No. Pos.	Código Manual	Código Proveedor	Descripción	P. Neto €	NOVA				SUPERNOVA		
					Nova	Camo	Nova 20	Camo 20	SuperNova	Tactical	Camo
1	037N	G0113000	Firing pin spring		●	●	●	●	●	●	●
2	025N	G0112000	Firing pin		●	●	●	●	●	●	●
3	028A	F0004501	Firing pin retaining pin		●	●	●	●	●	●	●
4	031N	G0112900	Locking head pin		●	●			●	●	●
4	031T	G0164900	Locking head pin				●	●			
5	233N	G0115500	Button bush		●	●	●	●	●	●	●
6	232N	G0115400	Fore-end button		●	●	●	●	●	●	●
7	223N	G0115800	L.H. action bar		●	●			●	●	●
7	223T	G0138800	L.H. action bar				●	●			
8	225N	G0112700	R.H. action bar		●	●			●	●	●
8	225T	G0138700	R.H. action bar				●	●			
9	234N	G0115600	Button spring		●	●	●	●	●	●	●
10	224N	G0112400	Action bar retaining pin		●	●	●	●	●	●	●
11	228T	F0081000	Fore-end assembly				●				
11	228T	F0081600	Fore-end assembly Camo TMB					●			
11	236N	F0054300	Fore-end assembly		●				●	●	
11	236N	F0166400	Stroke limit fore-end assembly							●	
11	236N	F0114800	Stroke limit fore-end assembly Camo MAX4			●					●
11	236N	F0056201	Stroke limit fore-end assembly Camo TMB			●					●
12	165N	F0039000	Locking head assembly		●	●			●	●	●
12	165T	F0080901	Locking head assembly				●	●			
13	035A	90003100	Extractor pin		●	●	●	●	●	●	●
14	034A	G0004901	Extractor		●	●	●	●	●	●	●
15	033J	G0126900	Extractor spring		●	●	●	●	●	●	●
16	024N	F0038900	Bolt group		●	●			●	●	●
16	024T	F0080801	Bolt group				●	●			
17	026N	G0081200	Bolt		●	●			●	●	●
17	026T	G0164801	Bolt				●	●			

NOVA - SUPERNOVA

NOVA - SUPERNOVA | DRWG. 3 | RECEIVER - MAGAZINE GROUP

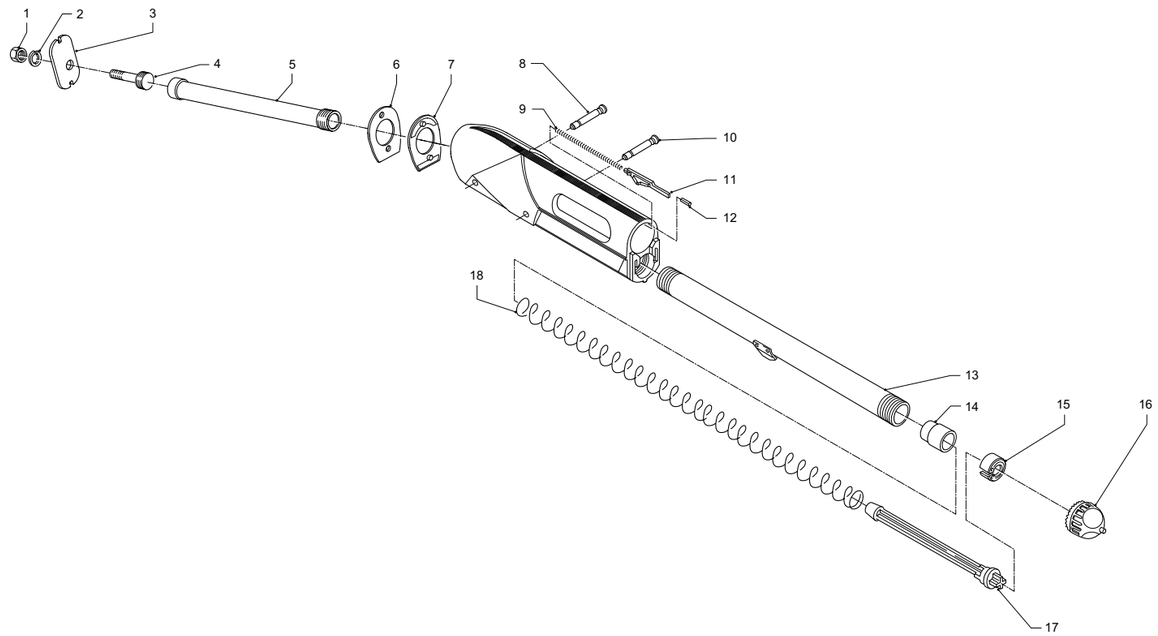

LEGEND
● = Original piece installed on standard model

20.08

No. Pos.	Código Manual	Código Proveedor	Descripción	P. Neto €	NOVA				SUPERNOVA		
					Nova	Camo	Nova 20	Camo 20	SuperNova	Tactical	Camo
1	053A	90006000	Stock retaining nut						●	●	●
2	052A	90004800	Elastic washer						●	●	●
3	150W	G0187600	Stock locking plate, drop 45/60 R.H./L.H. (steel)						●	●	●
3	150W	G0187500	Stock locking plate, drop 50/55 R.H./L.H. (steel)						●	●	●
4	050B	F0111301	Stock retaining nut screw						●	●	●
5	049D	F0084601	Recoil spring tube						●	●	●
6	286G	G0204700	Cast change shim						●	●	●
7	147Y	G0204600	Drop change shim 45 (synthetic)						●	●	●
7	147Y	G0281200	Drop change shim 50						●	●	●
7	147Y	G0136300	Drop change shim 50 (synthetic)						●	●	●
7	147Y	G0281300	Drop change shim 55						●	●	●
7	147Y	G0136400	Drop change shim 55 (synthetic)						●	●	●
7	147Y	G0281400	Drop change shim 60						●	●	●
7	147Y	G0136500	Drop change shim 60 (synthetic)						●	●	●
8	227N	G0114200	Trigger guard pin, short		●	●					
8	227S	G0261100	Trigger guard pin, short						●	●	●
8	227T	G0165202	Trigger guard pin, short				●	●			
9	046N	G0114300	Ejector pin spring		●	●	●	●	●	●	●
10	226N	G0114100	Trigger guard pin, long		●	●			●	●	●
10	226T	G0165102	Trigger guard pin, long				●	●			
11	045N	G0111700	Ejector plate		●	●	●	●	●	●	●
12	047N	90002700	Ejector pin		●	●	●	●	●	●	●
13	230N	G0115700	Magazine tube		●	●			●	●	●
13	230T	G0139100	Magazine tube				●	●			
14	065N	G0111800	Magazine follower		●	●			●	●	●
14	065T	G0138500	Magazine follower				●	●			
15	132G	G0008900	Magazine spring seal ring		●	●			●	●	●
15	132T	G0138900	Magazine spring seal ring				●	●			
16	069N	G0113700	Barrel retaining cap		●	●			●	●	●
16	069N	G0221600	Barrel retaining cap Camo MAX4			●					●
16	069N	G0119501	Barrel retaining cap Camo TMB			●					●
16	069T	G0138400	Barrel retaining cap				●	●			

NOVA - SUPERNOVA

NOVA - SUPERNOVA | DRWG. 4 | STOCK AND FORE-END GROUP

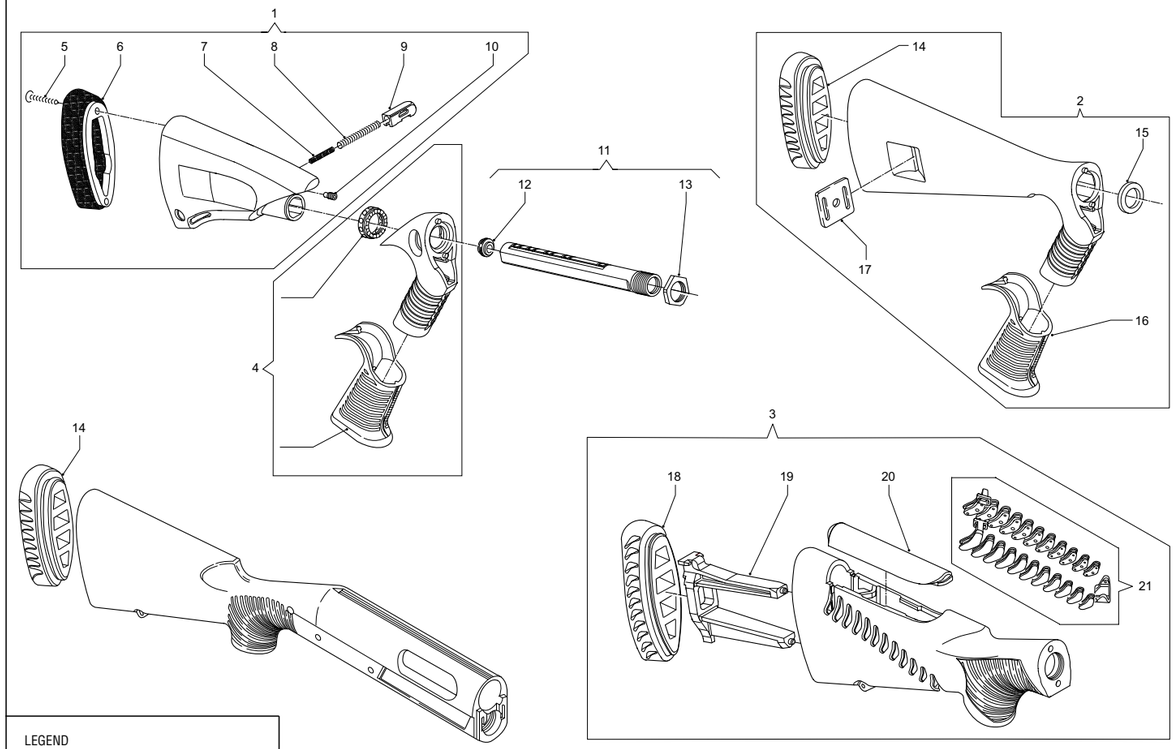

LEGEND
● = Original piece installed on standard model

20.12

No. Pos.	Código Manual	Código Proveedor	Descripción	P. Neto €	NOVA				SUPERNOVA																
					Nova	Camo	Nova 20	Camo 20	SuperNova	Tactical	Camo														
1	265S	F0142901	Telescoping stock assembly							●															
2	160C	F0135001	Stock synthetic Pistol Grip						●																
2	160C	F0134001	Stock synthetic Pistol Grip Camo TMB								●														
3	159S	F0142001	Stock Comfortech						●	●															
3	159S	F0142201	Stock Comfortech Camo MAX4								●														
3	159S	F0142100	Stock Comfortech Camo TMB								●														
4	117S	F0143000	Pistol grip handle assembly							●															
5	062C	90001500	Self-threaded screw							●															
6	061C	G0122900	Rubber butt plate, telescoping stock							●															
7	395S	G0263301	Stock clickstop pin							●															
8	004A	G0032201	Button spring							●															
9	108S	G0263202	Button							●															
10	224N	G0112400	Action bar retaining pin							●															
11	166S	F0143201	Recoil spring tube assembly							●															
12	050J	G0127400	Recoil spring plug							●															
13	075J	G0111200	Ring nut						●	●															
14	151N	G0113800	Butt plate		●	●																			
14	151T	G0138600	Rubber butt plate, Comfortech stock				●	●	●	●	●														
15	075C	G0024502	Stock ring						●	●	●														
16	083C	G0026200	Grip						●	●	●														
17	063C	G0028200	Sling swivel plate						●	●	●														
18	394G	G0222900	Rubber butt plate						●	●	●														
19	149C	G0215500	Comfort spacer						●	●	●														
20	380S	G0261500	Gel comb						●	●	●														
21	379G	F0108700	Chevrons assembly						●	●	●														

NOVA - SUPERNOVA

NOVA - SUPERNOVA | DRWG. 5 | BARREL GROUP

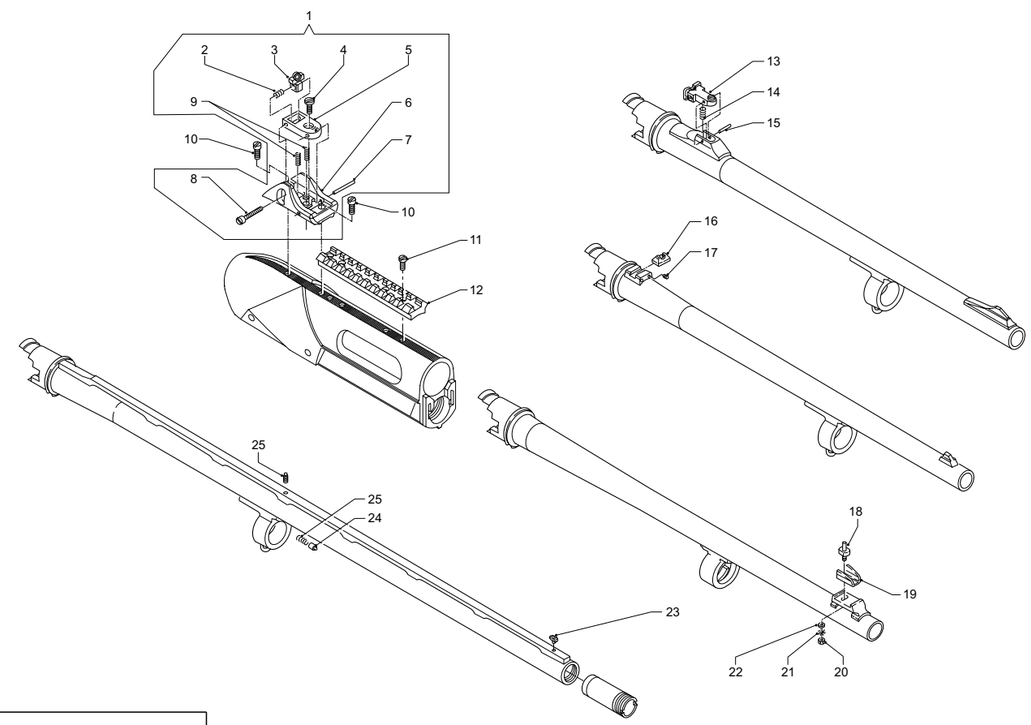

LEGEND
● = Original piece installed on standard model

20.14

No. Pos.	Código Manual	Código Proveedor	Descripción	P. Neto €	NOVA				SUPERNOVA																
					Nova	Camo	Nova 20	Camo 20	SuperNova	Tactical	Camo														
1	127C	F0049600	Rear sight assembly		●																				
1	127S	F0142300	Rear sight assembly							●															
2	258C	G0104600	Windage spring		●					●															
3	253C	G0104000	Rear sight aperture		●					●															
4	255C	G0104300	Elevation adjustment screw		●					●															
5	254C	G0104100	Rear sight support		●					●															
6	126C	G0104200	Rear sight protection guard		●																				
6	126S	G0261600	Rear sight protection guard							●															
7	257C	G0104500	Sight pin		●					●															
8	256C	G0104400	Windage adjustment screw		●					●															
9	259C	G0104700	Elevation spring		●					●															
10	128C	G0131500	Rear sight fixing screw							●															
10	128C	G0105400	Rear sight fixing screw, blued		●																				
11	128S	G0298000	Telescope screw							●															
12	260N		Telescope guide (see accessories)																						
13	127N	F0027000	Rear sight		●	●	●	●	●	●	●														
14	259N	G0063700	Rear sight spring		●	●	●	●	●	●	●														
15	035A	90003100	Spring pin		●	●	●	●	●	●	●														
16	042C	G0024200	Rear sight, blued		●				●	●															
17	043C	G0077500	Rear sight fixing screw, nickel-plated		●				●																
18	110C	G0021100	Front sight		●					●															
19	111F	G0022100	Front sight protection guard		●					●															
20	113F	90006100	Front sight fixing self-locking nut		●					●															
20	113J	G0125600	Front sight fixing self-locking nut		●					●															
21	112F	90004500	Front sight elastic washer		●					●															
22	243F	90010200	Front sight washer		●					●															
23	044N	G0129000	Fluorescent front sight		●	●	●	●	●	●	●														
24	074J	G0122800	Cap retaining pin		●	●	●	●	●	●	●														
25	108P	G0040200	Cap retaining pin spring		●	●	●	●	●	●	●														
26	153A	G0021500	Intermediate sight		●	●	●	●	●		●														

NOVA - SUPERNOVA

30

ARGO-ARGO-E
308
30.06
9,3 x 62
7 x 64
300

SPECIAL-DE LUXE-CLASS
308
30.06
9,3 x 62
7 x 64
300

COMFORT
308
30.06
9,3 x 62
7 x 64
300

LIMITED EDITION
308
30.06
9,3 x 62
7 x 64
300

R1
338 WM

30.01

ARGO - R1 | **DRWG. 1** | **TRIGGER GUARD GROUP**

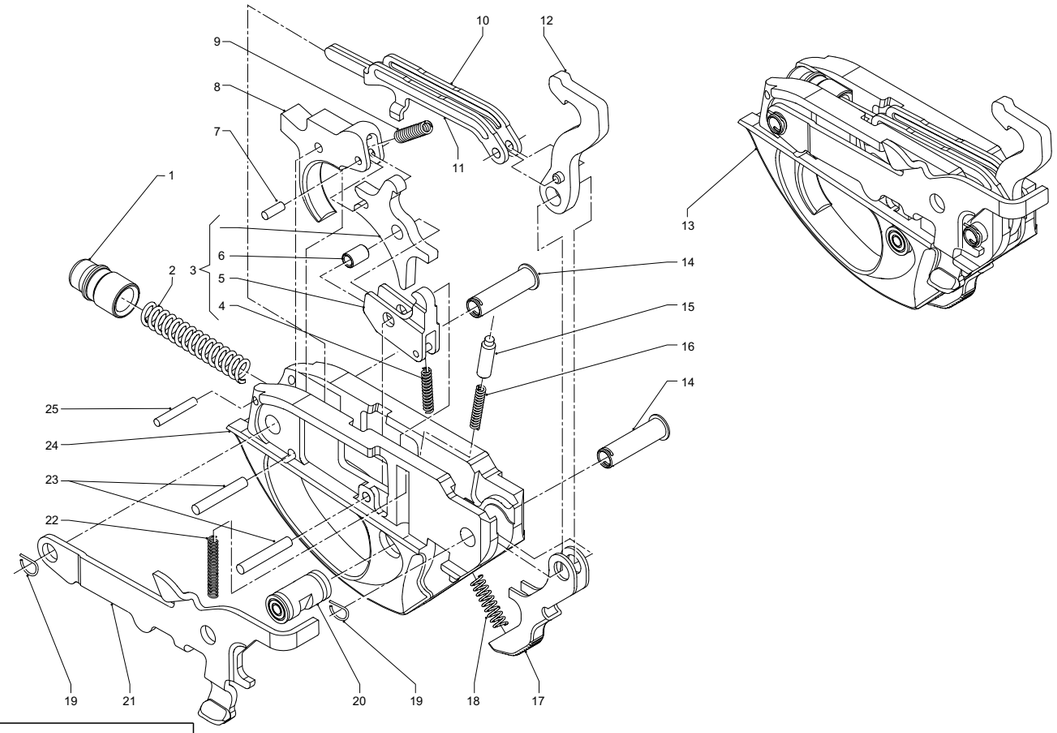

LEGEND
● = Original piece installed on standard model

30.02

No. Pos.	Código Manual	Código Proveedor	Descripción	P. Neto €	ARGO - ARGO-E																					R1	
					ARGO - ARGO-E					COMFORT					SPECIAL - DE LUXE - CLASS					LIMITED EDITION						
					308	30.06	9,3 x 62	7 x 64	300	308	30.06	9,3 x 62	7 x 64	300	308	30.06	9,3 x 62	7 x 64	300	308	30.06	9,3 x 62	7 x 64	300	338 WM	
1	003W	G0277401	Hammer link spring cap		●	●	●	●	●	●	●	●	●	●	●	●	●	●	●	●	●	●	●	●	●	
2	004W	G0188100	Hammer spring		●	●	●	●	●	●	●	●	●	●	●	●	●	●	●	●	●	●	●	●	●	
3	443W	F0089101	Disconnector assembly		●	●	●	●	●	●	●	●	●	●	●	●	●	●	●	●	●	●	●	●	●	
4	007A	G0032001	Safety spring shotgun TR		●	●	●	●	●	●	●	●	●	●	●	●	●	●	●	●	●	●	●	●	●	
5	215V	G0277500	Safety disconnector, blued		●	●	●	●	●	●	●	●	●	●	●	●	●	●	●	●	●	●	●	●	●	
6	024P	G0040601	1st pull adjustment screw, nickel-plated Pist.		●	●	●	●	●	●	●	●	●	●	●	●	●	●	●	●	●	●	●	●	●	
7	285W	90013800	Disconnector trigger roller		●	●	●	●	●	●	●	●	●	●	●	●	●	●	●	●	●	●	●	●	●	
8	009W	G0289900	Trigger (gold-plated)												●	●	●	●	●	●	●	●	●	●		
8	009W	G0277300	Trigger (black)		●	●	●	●	●	●	●	●	●	●	●	●	●	●	●	●	●	●	●	●	●	
9	011W	G0188201	Trigger spring		●	●	●	●	●	●	●	●	●	●	●	●	●	●	●	●	●	●	●	●	●	
10	444W	G0182401	Hammer link (L.H.)		●	●	●	●	●	●	●	●	●	●	●	●	●	●	●	●	●	●	●	●	●	
11	281W	G0182300	Hammer link (R.H.)		●	●	●	●	●	●	●	●	●	●	●	●	●	●	●	●	●	●	●	●	●	
12	002W	G0200201	Hammer		●	●	●	●	●	●	●	●	●	●	●	●	●	●	●	●	●	●	●	●	●	
13	001W	F0161300	Trigger group assembly, gold-plated												●	●	●	●	●	●	●	●	●	●		
13	001W	F0088302	Trigger group assembly, black		●	●	●	●	●	●	●	●	●	●	●	●	●	●	●	●	●	●	●	●	●	
14	016W	G0183000	Trigger pin bush		●	●	●	●	●	●	●	●	●	●	●	●	●	●	●	●	●	●	●	●	●	
15	008W	G0191400	Safety plunger pin		●	●	●	●	●	●	●	●	●	●	●	●	●	●	●	●	●	●	●	●	●	
16	046J	G0128100	Safety spring		●	●	●	●	●	●	●	●	●	●	●	●	●	●	●	●	●	●	●	●	●	
17	282W	G0182000	Magazine unlock lever		●	●	●	●	●	●	●	●	●	●	●	●	●	●	●	●	●	●	●	●	●	
18	283W	G0188400	Magazine lock spring		●	●	●	●	●	●	●	●	●	●	●	●	●	●	●	●	●	●	●	●	●	
19	018A	G0032300	Trigger guard pin spring		●	●	●	●	●	●	●	●	●	●	●	●	●	●	●	●	●	●	●	●	●	
20	013W	F0285800	Silenced safety button		●	●	●	●	●	●	●	●	●	●	●	●	●	●	●	●	●	●	●	●	●	
21	219W	G0182900	No-load indicator lever		●	●	●	●	●	●	●	●	●	●	●	●	●	●	●	●	●	●	●	●	●	
22	220W	G0188300	No-load indicator spring		●	●	●	●	●	●	●	●	●	●	●	●	●	●	●	●	●	●	●	●	●	
23	010W	90008900	Disconnector trigger roller		●	●	●	●	●	●	●	●	●	●	●	●	●	●	●	●	●	●	●	●	●	
24	014W	G0181700	Trigger guard		●	●	●	●	●	●	●	●	●	●	●	●	●	●	●	●	●	●	●	●	●	
25	052P	90014900	Roller		●	●	●	●	●	●	●	●	●	●	●	●	●	●	●	●	●	●	●	●	●	

ARGO - R1

ARGO - R1 | DRWG. 2 | BOLT GROUP

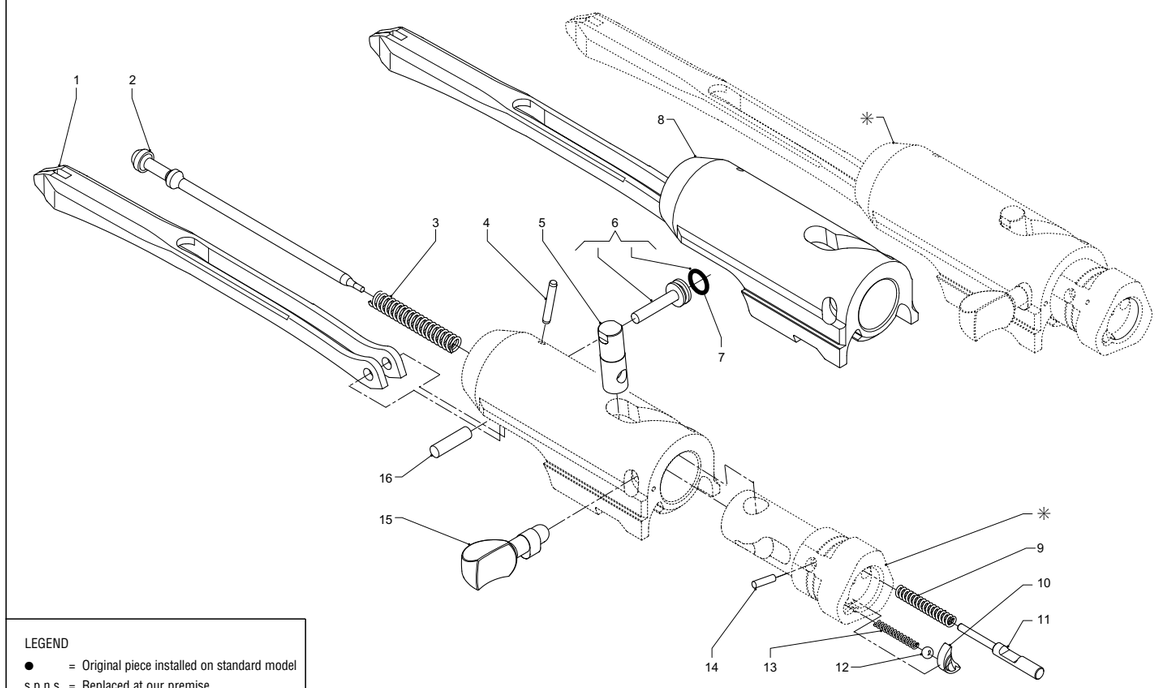

LEGEND

- ● = Original piece installed on standard model
- s.p.n.s. = Replaced at our premise
- * = Item not for sale separately from the barrel

30.04

N. Pos.	Código Manual	Código Proveedor	Descripción	P. Neto €	ARGO - ARGO-E																				R1	
					ARGO - ARGO-E					COMFORT					SPECIAL - DE LUXE - CLASS					LIMITED EDITION						
					308	30.06	9,3 x 62	7 x 64	300	308	30.06	9,3 x 62	7 x 64	300	308	30.06	9,3 x 62	7 x 64	300	308	30.06	9,3 x 62	7 x 64	300	338 WM	
1	027W	G0183300	Link		●	●	●	●	●	●	●	●	●	●	●	●	●	●	●	●	●	●	●	●	●	
2	025W	G0183400	Firing pin		●	●	●	●	●	●	●	●	●	●	●	●	●	●	●	●	●	●	●	●	●	
3	037W	G0188500	Firing pin spring		●	●	●	●	●	●	●	●	●	●	●	●	●	●	●	●	●	●	●	●	●	
4	421W	90021200	Pin		●	●	●	●	●	●	●	●	●	●	●	●	●	●	●	●	●	●	●	●	●	
5	031W	G0183201	Locking head pin		●	●	●	●	●	●	●	●	●	●	●	●	●	●	●	●	●	●	●	●	●	
6	028A	F0004501	Firing pin retaining pin assembly		●	●	●	●	●	●	●	●	●	●	●	●	●	●	●	●	●	●	●	●	●	
7	097F	90001100	O-Ring		●	●	●	●	●	●	●	●	●	●	●	●	●	●	●	●	●	●	●	●	●	
8	287W	F0088701	Bolt, partial			●	●	●	●		●	●	●	●		●	●	●	●		●	●	●	●		
8	287W	F0114301	Bolt, partial		●					●					●					●						
8	287W	F0139801	Bolt, partial																						●	
9	046W	G0187900	Ejector spring		●	●	●	●	●	●	●	●	●	●	●	●	●	●	●	●	●	●	●	●	●	
10	034W	G0183601	Extractor		●	●	●	●	●	●	●	●	●	●	●	●	●	●	●	●	●	●	●	●	●	
11	045W	G0183100	Ejector		●	●	●	●	●	●	●	●	●	●	●	●	●	●	●	●	●	●	●	●	●	
12	074C	90020400	Extractor castor		●	●	●	●	●	●	●	●	●	●	●	●	●	●	●	●	●	●	●	●	●	
13	033W	G0271700	Extractor spring		●	●	●	●	●	●	●	●	●	●	●	●	●	●	●	●	●	●	●	●	●	
14	035A	90029600	Extractor pin		●	●	●	●	●	●	●	●	●	●	●	●	●	●	●	●	●	●	●	●	●	
15	030W	G0183500	Bolt handle		●	●	●	●	●	●	●	●	●	●	●	●	●	●	●	●	●	●	●	●		
15	030W	G0258900	Bolt handle, mat																						●	
16	029W	90020000	Link pin		●	●	●	●	●	●	●	●	●	●	●	●	●	●	●	●	●	●	●	●	●	
*	024W	F0088801	Bolt group (s.p.n.s.)			●	●	●			●	●	●			●	●	●			●	●	●			
*	024W	F0088901	Bolt group (s.p.n.s.)						●					●					●					●		
*	024W	F0114401	Bolt group (s.p.n.s.)		●					●					●					●						
*	024W	F0139901	Bolt group (s.p.n.s.)																						●	
*	032W	G0183701	Locking head (s.p.n.s.)		●	●	●	●		●	●	●	●		●	●	●		●	●	●	●		●		
*	032W	G0183801	Locking head (s.p.n.s.)						●					●				●					●		●	
–	165W	F0088402	Locking head assembly (s.p.n.s.)		●	●	●	●		●	●	●	●		●	●	●	●		●	●	●	●			
–	165W	F0088502	Locking head assembly (s.p.n.s.)						●					●					●					●	●	

ARGO - R1

30.05

ARGO - R1 | DRWG. 3 | RECEIVER GROUP

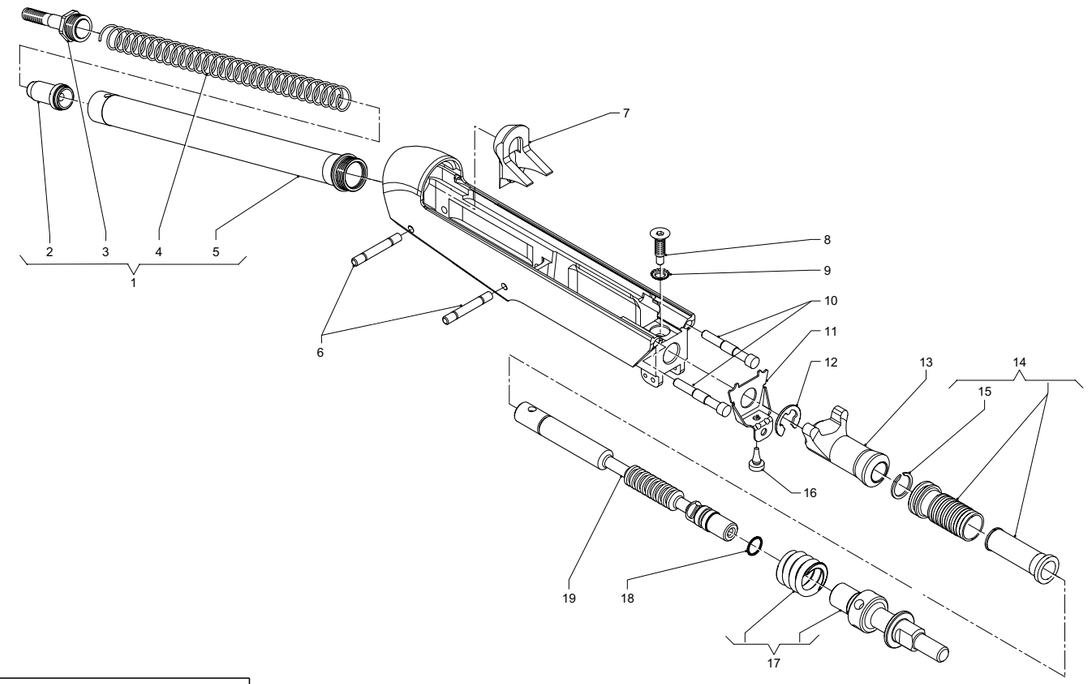

LEGEND

- ● = Original piece installed on standard model

30.06

No. Pos.	Código Manual	Código Proveedor	Descripción	P. Neto €	ARGO - ARGO-E																				R1	
					ARGO - ARGO-E					COMFORT					SPECIAL - DE LUXE - CLASS					LIMITED EDITION						
					308	30.06	9,3 x 62	7 x 64	300	308	30.06	9,3 x 62	7 x 64	300	308	30.06	9,3 x 62	7 x 64	300	308	30.06	9,3 x 62	7 x 64	300	338 WM	
1	166W	F0089601	Recoil spring tube assembly		●	●	●	●	●	●	●	●	●	●	●	●	●	●	●	●	●	●	●	●	●	
2	055W	G0189100	Recoil spring plunger pin		●	●	●	●	●	●	●	●	●	●	●	●	●	●	●	●	●	●	●	●	●	
3	050U	F0111901	Stock retaining nut screw		●	●	●	●	●	●	●	●	●	●	●	●	●	●	●	●	●	●	●	●	●	
4	054W	G0188700	Recoil spring		●	●	●	●	●	●	●	●	●	●	●	●	●	●	●	●	●	●	●	●		
5	049D	F0084601	Recoil spring tube		●	●	●	●	●	●	●	●	●	●	●	●	●	●	●	●	●	●	●	●	●	
6	015W	G0191500	Trigger guard pin, blued		●	●	●	●	●	●	●	●	●	●	●										●	
6	015W	G0182100	Trigger guard pin, nickel-plated													●	●	●	●	●	●	●	●	●		
7	420W	G0221200	Bolt stroke limited		●					●					●					●						
8	295W	G0184301	Cylinder plunger-pin screw		●	●	●	●	●	●	●	●	●	●	●	●	●	●	●	●	●	●	●	●	●	
9	296W	90014500	Conical-toothed washer		●	●	●	●	●	●	●	●	●	●	●	●	●	●	●	●	●	●	●	●	●	
10	269W	G0531900	Bolt follower pin		●	●	●	●	●	●	●	●	●	●	●	●	●	●	●	●	●	●	●	●	●	
11	088W	G0189300	Pin shoulder-plate		●	●	●	●	●	●	●	●	●	●	●	●	●	●	●	●	●	●	●	●	●	
12	298W	90014400	Piston plunger-pin seeger		●	●	●	●	●	●	●	●	●	●	●	●	●	●	●	●	●	●	●	●	●	
13	412V	G0531301	Piston		●	●	●	●	●	●	●	●	●	●	●	●	●	●	●	●	●	●	●	●	●	
14	399V	F0288600	Piston extension assembly		●	●	●	●	●	●	●	●	●	●	●	●	●	●	●	●	●	●	●	●	●	
15	302W	G0478100	Piston seeger		●	●	●	●	●	●	●	●	●	●	●	●	●	●	●	●	●	●	●	●	●	
16	299W	G0184700	Break-action magazine damper		●	●	●	●	●	●	●	●	●	●	●	●	●	●	●	●	●	●	●	●	●	
17	069W	F0288500	Barrel lock follower assembly		●	●	●	●	●	●	●	●	●	●	●	●	●	●	●	●	●	●	●	●	●	
18	270W	90014200	O-Ring		●	●	●	●	●	●	●	●	●	●	●	●	●	●	●	●	●	●	●	●	●	
19	066W	G0531200	Cylinder plunger pin		●	●	●	●	●	●	●	●	●	●	●	●	●	●	●	●	●	●	●	●	●	

ARGO - R1

30.07

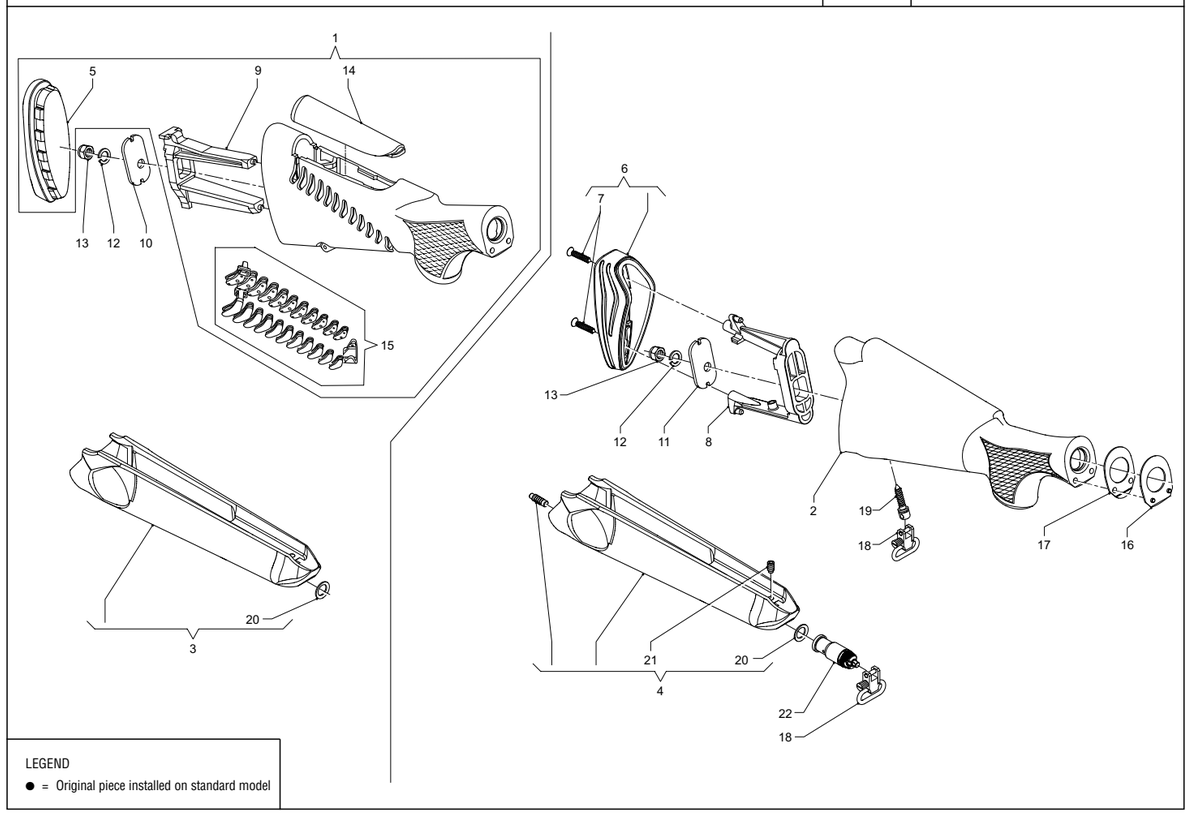

LEGEND
● = Original piece installed on standard model

30.08

No. Pos.	Código Manual	Código Proveedor	Descripción	P. Neto €	ARGO - ARGO-E																				R1	
					ARGO - ARGO-E					COMFORT					SPECIAL - DE LUXE - CLASS					LIMITED EDITION						
					308	30.06	9,3 x 62	7 x 64	300	308	30.06	9,3 x 62	7 x 64	300	308	30.06	9,3 x 62	7 x 64	300	308	30.06	9,3 x 62	7 x 64	300	338 WM	
1	388W	F0139102	Stock Comfort (without butt plate)							●	●	●	●	●												
1	388W	F0298100	Stock Comfort Camo AM green (without butt plate)							●	●	●	●	●												
2	176W	G0545700	Montecarlo wood stock GR2 oil (without butt plate)		●	●	●	●	●																	
2	176W	G0546500	Montecarlo wood stock GR3 oil (without butt plate)												●	●	●	●	●							
2	176W	G0564000	Montecarlo wood stock GR4 oil (without butt plate)																	●	●	●	●	●		
2	181W	G0545900	Pig-backed wood stock GR2 oil (without butt plate)						●																	
3	390W	G0257001	Fore-end, synthetic Soft Touch							●	●	●	●	●											●	
3	390W	G0542700	Fore-end, synthetic Camo AM green							●	●	●	●	●												
4	174W	F0300500	Wood fore-end, GR2 oil		●	●	●	●	●																	
4	174W	F0300800	Wood fore-end, GR3 oil												●	●	●	●	●							
4	174W	F0311800	Wood fore-end, GR4 oil																	●	●	●	●	●		
5	446G	G0256200	Gel recoil pad (R.H.), short							●	●	●	●	●											●	
5	446G	G0228600	Gel recoil pad (R.H.), long							●	●	●	●	●											●	
5	446G	G0216401	Gel recoil pad (R.H.), middle-size							●	●	●	●	●											●	
5	446M	G0257800	Gel recoil pad (L.H.), short							●	●	●	●	●											●	
5	446M	G0232400	Gel recoil pad (L.H.), long							●	●	●	●	●											●	
5	446M	G0216500	Gel recoil pad (L.H.), middle-size							●	●	●	●	●											●	
5	446X	G0523000	Butt plate in polyurethane (R.H.), short							●	●	●	●	●											●	
5	446X	G0523100	Butt plate in polyurethane (R.H.), long							●	●	●	●	●											●	
5	446X	G0513500	Butt plate in polyurethane (R.H.), middle-size							●	●	●	●	●											●	
5	446X	G0546300	Butt plate in polyurethane (L.H.), short							●	●	●	●	●											●	
5	446X	G0546400	Butt plate in polyurethane (L.H.), long							●	●	●	●	●											●	
5	446X	G0510800	Butt plate in polyurethane (L.H.), middle-size							●	●	●	●	●											●	
6	151W	F0098400	Rubber butt plate kit, short		●	●	●	●	●						●	●	●	●	●	●	●	●	●	●		
6	151W	F0098300	Rubber butt plate kit, long		●	●	●	●	●						●	●	●	●	●	●	●	●	●	●		
6	151W	F0098200	Rubber butt plate kit, middle-size		●	●	●	●	●						●	●	●	●	●	●	●	●	●	●		
7	062L	G0098701	Butt plate screw		●	●	●	●	●						●	●	●	●	●	●	●	●	●	●		
8	149W	G0187000	Stock spacer		●	●	●	●	●						●	●	●	●	●	●	●	●	●	●		
9	149C	G0215500	Stock spacer							●	●	●	●	●											●	
10	392W	G0256300	Stock locking plate, drop 50							●	●	●	●	●											●	
10	392W	G0256400	Stock locking plate, drop 55							●	●	●	●	●											●	
10	392W	G0256500	Stock locking plate, drop 60							●	●	●	●	●											●	

ARGO - R1

30. 09

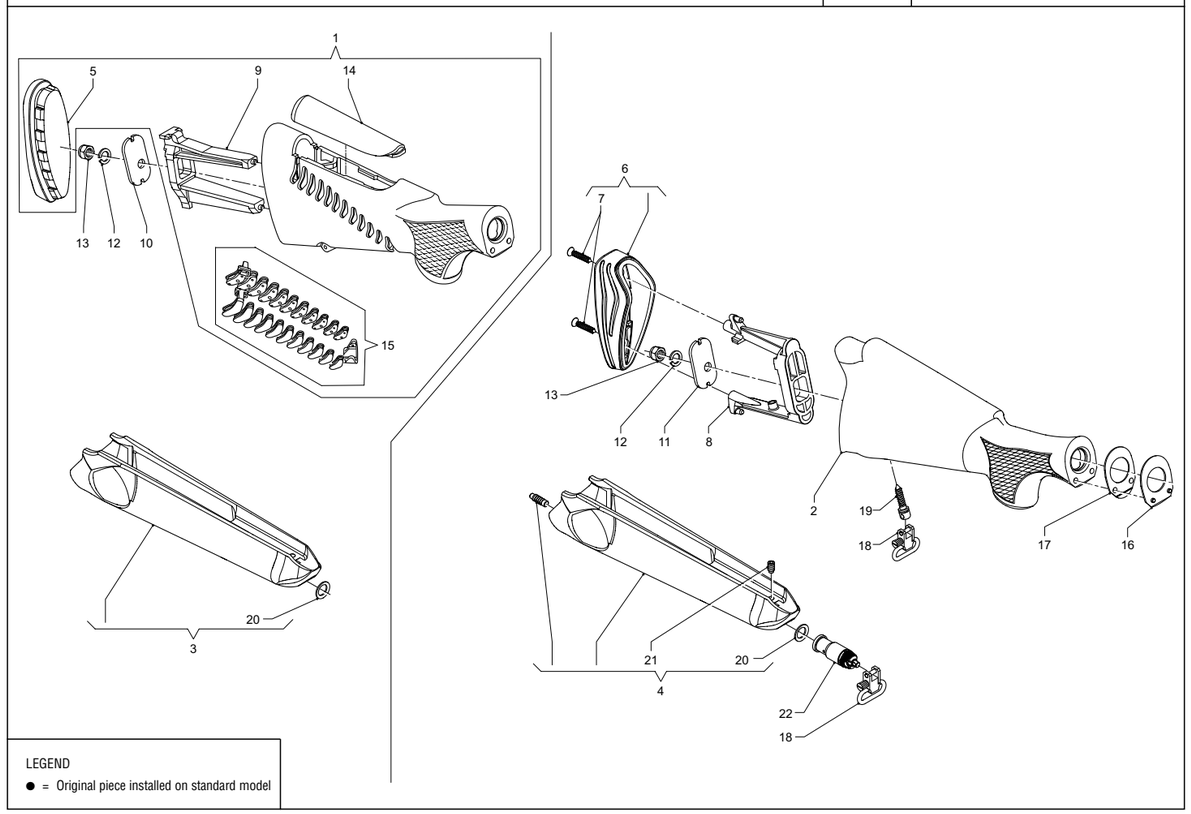

LEGEND
● = Original piece installed on standard model

30.10

No. Pos.	Código Manual	Código Proveedor	Descripción	P. Neto €	ARGO - ARGO-E																				R1	
					ARGO - ARGO-E					COMFORT					SPECIAL - DE LUXE - CLASS					LIMITED EDITION						
					308	30.06	9,3 x 62	7 x 64	300	308	30.06	9,3 x 62	7 x 64	300	308	30.06	9,3 x 62	7 x 64	300	308	30.06	9,3 x 62	7 x 64	300	338 WM	
10	392W	G0256600	Stock locking plate, drop 64							●	●	●	●	●											●	
11	150W	G0187600	Stock locking plate, drop 45/60		●	●	●	●	●						●	●	●	●	●	●	●	●	●	●		
11	150W	G0187500	Stock locking plate, drop 50/55		●	●	●	●	●						●	●	●	●	●	●	●	●	●	●		
11	150W	G0240900	Stock locking plate, drop 64		●	●	●	●	●						●	●	●	●	●	●	●	●	●	●		
12	052A	90004800	Spring washer		●	●	●	●	●	●	●	●	●	●	●	●	●	●	●	●	●	●	●	●	●	
13	053A	90006000	Stock retaining nut		●	●	●	●	●	●	●	●	●	●	●	●	●	●	●	●	●	●	●	●	●	
14	380G	G0256100	Gel comb, high R.H.							●	●	●	●	●											●	
14	380G	G0295700	Gel comb, high L.H.							●	●	●	●	●											●	
14	380G	G0215700	Gel comb, low							●	●	●	●	●											●	
14	380G	G0233100	Gel comb, medium							●	●	●	●	●											●	
15	379G	F0108700	Chevrons assembly							●	●	●	●	●											●	
16	147W	G0187100	Drop change shim 45		●	●	●	●	●	●	●	●	●	●	●	●	●	●	●	●	●	●	●	●	●	
16	147W	G0187200	Drop change shim 50		●	●	●	●	●	●	●	●	●	●	●	●	●	●	●	●	●	●	●	●	●	
16	147W	G0187300	Drop change shim 55		●	●	●	●	●	●	●	●	●	●	●	●	●	●	●	●	●	●	●	●	●	
16	147W	G0187400	Drop change shim 60		●	●	●	●	●	●	●	●	●	●	●	●	●	●	●	●	●	●	●	●	●	
16	147W	G0240800	Drop change shim 64		●	●	●	●	●	●	●	●	●	●	●	●	●	●	●	●	●	●	●	●	●	
17	286W	G0189200	Drop change shim		●	●	●	●	●	●	●	●	●	●	●	●	●	●	●	●	●	●	●	●	●	
18	188L	F0038501	Removable sling swivel		●	●	●	●	●	●	●	●	●	●	●	●	●	●	●	●	●	●	●	●	●	
19	152C	G0028800	Stock sling swivel screw, blued		●	●	●	●	●	●					●	●	●	●	●	●	●	●	●	●	●	
20	289W	90014700	Fore-end washer		●	●	●	●	●	●	●	●	●	●	●	●	●	●	●	●	●	●	●	●	●	
21	224W	90014800	Fore-end grub screw		●	●	●	●	●	●					●	●	●	●	●	●	●	●	●	●	●	
22	146W	F0089701	Fore-end follower		●	●	●	●	●	●	●	●	●	●	●	●	●	●	●	●	●	●	●	●	●	

ARGO - R1

30. 11

ARGO - R1 | DRWG. 5 | BARREL GROUP

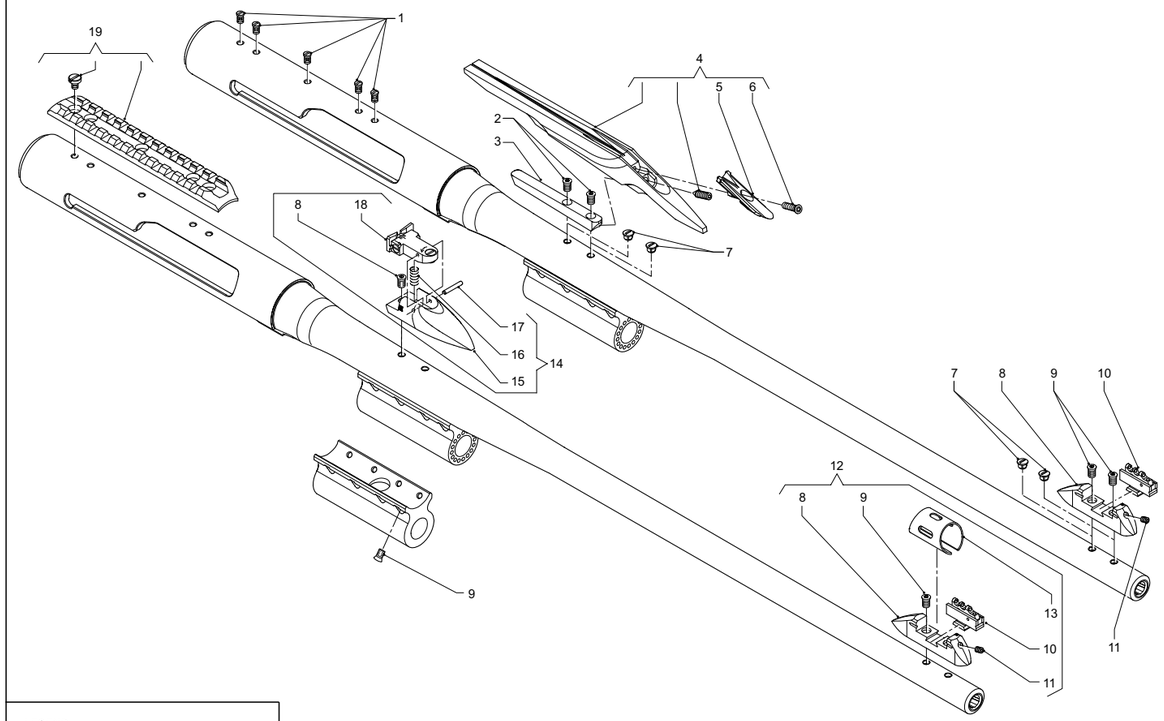

LEGEND
● = Original piece installed on standard model

30.12

No. Pos.	Código Manual	Código Proveedor	Descripción	P. Neto €	ARGO - ARGO-E																					R1	
					ARGO - ARGO-E					COMFORT					SPECIAL - DE LUXE - CLASS					LIMITED EDITION						
					308	30.06	9,3 x 62	7 x 64	300	308	30.06	9,3 x 62	7 x 64	300	308	30.06	9,3 x 62	7 x 64	300	308	30.06	9,3 x 62	7 x 64	300	338 WM	
1	294W	G0185401	Cover plug w/threaded holes		●	●	●	●	●	●	●	●	●	●	●	●	●	●	●	●	●	●	●	●	●		
2	398W	90019300	Torx screw		●	●	●	●	●	●	●	●	●	●	●	●	●	●	●	●	●	●	●	●	●		
3	291W	G0190901	Rib-fixing insert		●	●	●	●	●	●	●	●	●	●	●	●	●	●	●	●	●	●	●	●	●		
4	293W	F0293900	Rib (see accessories)		●	●	●	●	●	●	●	●	●	●	●	●	●	●	●	●	●	●	●	●	●		
5	469W	G0539600	Rib fiber optic support		●	●	●	●	●	●	●	●	●	●	●	●	●	●	●	●	●	●	●	●	●		
6	470W	90030200	Fixing screw for fiber optic support		●	●	●	●	●	●	●	●	●	●	●	●	●	●	●	●	●	●	●	●	●		
7	423W	G0209700	Barrel plug w/threaded holes		●	●	●	●	●	●	●	●	●	●	●	●	●	●	●	●	●	●	●	●	●		
8	290W	G0190200	Front-sight carrier		●	●	●	●	●	●	●	●	●	●	●	●	●	●	●	●	●	●	●	●	●		
9	128W	90015000	Torx screw (s.p.n.s.)		●	●	●	●	●	●	●	●	●	●	●	●	●	●	●	●	●	●	●	●	●		
10	110W	F0090400	Adjustable front-sight assembly		●	●	●	●	●	●	●	●	●	●	●	●	●	●	●	●	●	●	●	●	●		
11	071A	90005800	Front-sight guide grub screw		●	●	●	●	●	●	●	●	●	●	●	●	●	●	●	●	●	●	●	●	●		
12	297W	F0267100	Complete front-sight assembly		●	●	●	●	●	●	●	●	●	●	●	●	●	●	●	●	●	●	●	●	●		
13	111W	F0097800	Front-sight protection guard		●	●	●	●	●	●	●	●	●	●	●	●	●	●	●	●	●	●	●	●	●		
14	127W	F0098000	Back-sight assembly, complete (see accessories)		●	●	●	●	●	●	●	●	●	●	●	●	●	●	●	●	●	●	●	●	●		
15	126W	G0190100	Back-sight carrier		●	●	●	●	●	●	●	●	●	●	●	●	●	●	●	●	●	●	●	●	●		
16	259N	G0063700	Back-sight spring		●	●	●	●	●	●	●	●	●	●	●	●	●	●	●	●	●	●	●	●	●		
17	035A	90003100	Pin		●	●	●	●	●	●	●	●	●	●	●	●	●	●	●	●	●	●	●	●	●		
18	127N	F0027000	Back-sight		●	●	●	●	●	●	●	●	●	●	●	●	●	●	●	●	●	●	●	●	●		
19	260W	F0097901	Scope mount kit (see accessories)		●	●	●	●	●	●	●	●	●	●	●	●	●	●	●	●	●	●	●	●	●		

ARGO - R1

30. 13

ARGO - R1 | DRWG. 6 | MAGAZINE GROUP

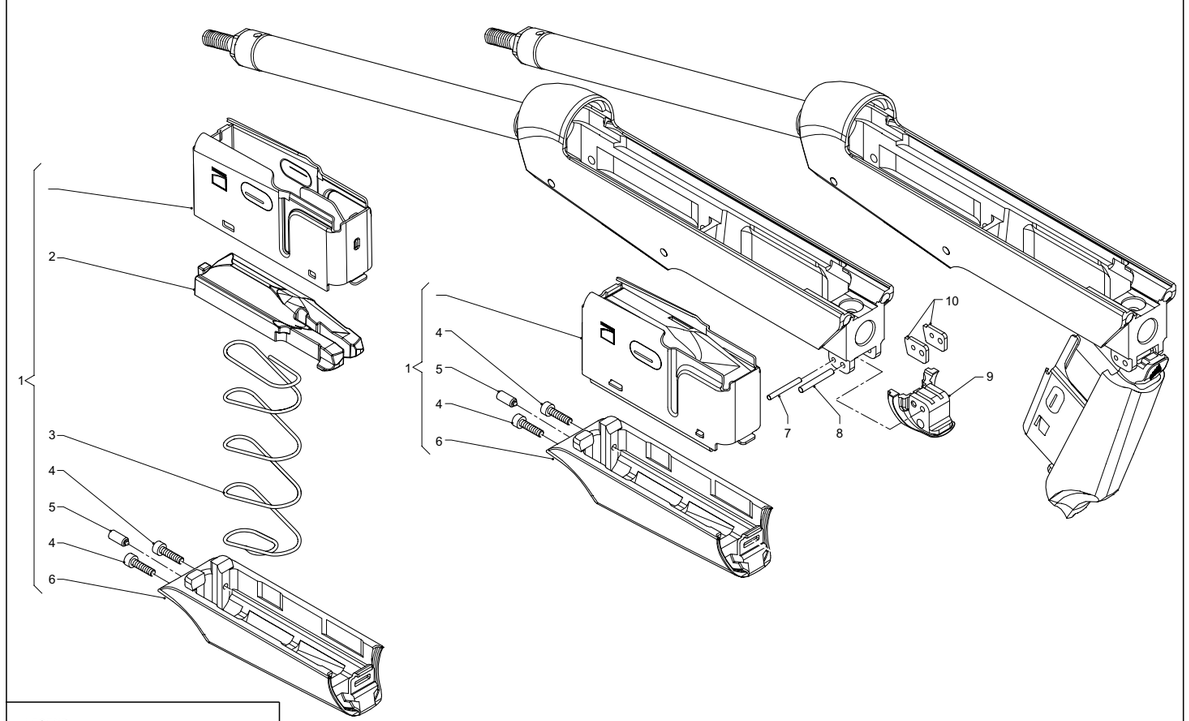

LEGEND
● = Original piece installed on standard model

30.14

No. Pos.	Código Manual	Código Proveedor	Descripción	P. Neto €	ARGO - ARGO-E																					R1	
					ARGO - ARGO-E					COMFORT					SPECIAL - DE LUXE - CLASS					LIMITED EDITION						
					308	30.06	9,3 x 62	7 x 64	300	308	30.06	9,3 x 62	7 x 64	300	308	30.06	9,3 x 62	7 x 64	300	308	30.06	9,3 x 62	7 x 64	300	338 WM	
1	307W	F0304301	2-round prism magazine assembly (see accessories)			●		●			●		●			●		●			●		●			
1	307W	F0310401	2-round prism magazine assembly (see accessories)						●					●					●						●		
1	307W	F0105201	2-round prism magazine assembly (see accessories)		●					●					●					●							
1	307W	F0127702	2-round prism magazine assembly (see accessories)				●					●					●						●			
1	307W	F0308900	2-round prism magazine assembly (see accessories)																						●	
1	307W	F0098700	3-round prism magazine assembly (see accessories)						●					●					●						●	
1	307W	F0308600	3-round prism magazine assembly (see accessories)																						●	
1	307W	F0304401	4-round prism magazine assembly (see accessories)			●		●			●		●			●		●			●		●			
1	307W	F0307700	4-round prism magazine assembly (see accessories)		●					●					●					●						
1	307W	F0127301	4-round prism magazine assembly (see accessories)				●					●					●						●			
1	307W	F0106400	5-round prism magazine assembly (see accessories)						●					●					●						●	
1	307W	F0304501	10-round prism magazine assembly (see accessories)			●		●			●		●			●		●			●		●			
1	307W	F0106301	10-round prism magazine assembly (see accessories)		●					●					●					●						
2	100W	G0549600	Magazine follower			●		●			●		●			●		●			●		●			
2	100W	G0549700	Magazine follower		●					●					●					●						
2	100W	G0549800	Magazine follower						●					●					●						●	
3	480W	G0551900	2-4-round magazine spring		●	●		●		●	●		●		●	●		●		●	●		●			
3	480W	G0579400	2-4-round magazine spring						●					●					●						●	
3	480W	G0551300	10-round magazine spring		●	●		●		●	●		●		●	●		●		●	●		●			
4	310W	90014600	Magazine fixing screw		●	●	●	●	●	●	●	●	●	●	●	●	●	●	●	●	●	●	●	●	●	
5	309W	90015200	Magazine presser		●	●	●	●	●	●	●	●	●	●	●	●	●	●	●	●	●	●	●	●	●	
6	311W	G0185900	Prism magazine carrier		●	●	●	●	●	●	●	●	●	●	●	●	●	●	●	●	●	●	●	●	●	
7	010L	90008800	Pin		●	●	●	●	●	●	●	●	●	●	●	●	●	●	●	●	●	●	●	●	●	
8	306W	90014900	Pin		●	●	●	●	●	●	●	●	●	●	●	●	●	●	●	●	●	●	●	●	●	
9	305W	G0186000	Prism magazine boss		●	●	●	●	●	●	●	●	●	●	●	●	●	●	●	●	●	●	●	●	●	
10	304W	G0186100	Magazine boss insert		●	●	●	●	●	●	●	●	●	●	●	●	●	●	●	●	●	●	●	●	●	

ARGO - R1

30. 15

40

MP 90S
22-GAUGE
32-GAUGE

MP 90S WORLD CUP
22-GAUGE
32-GAUGE

MP 95E
22-GAUGE
32-GAUGE

40.01

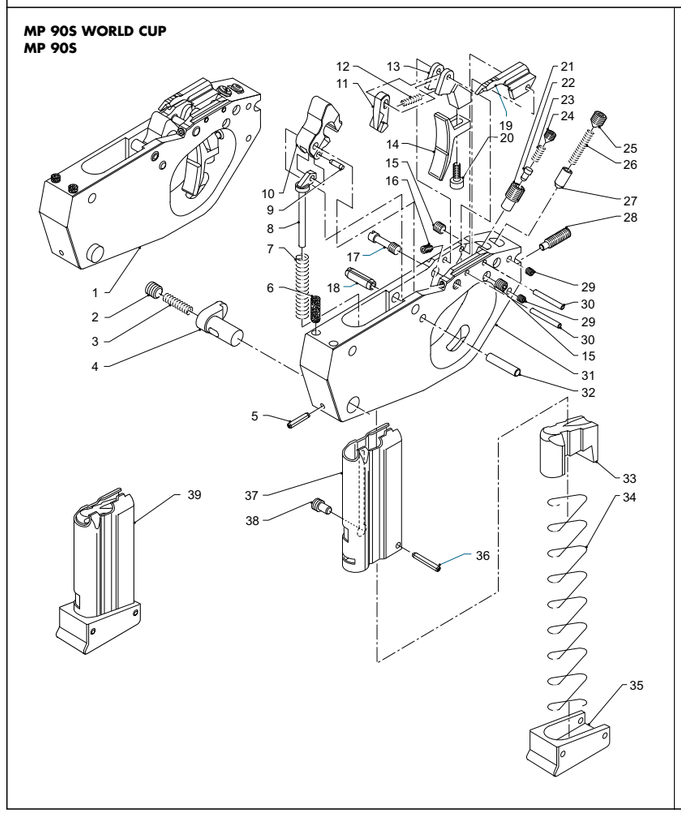

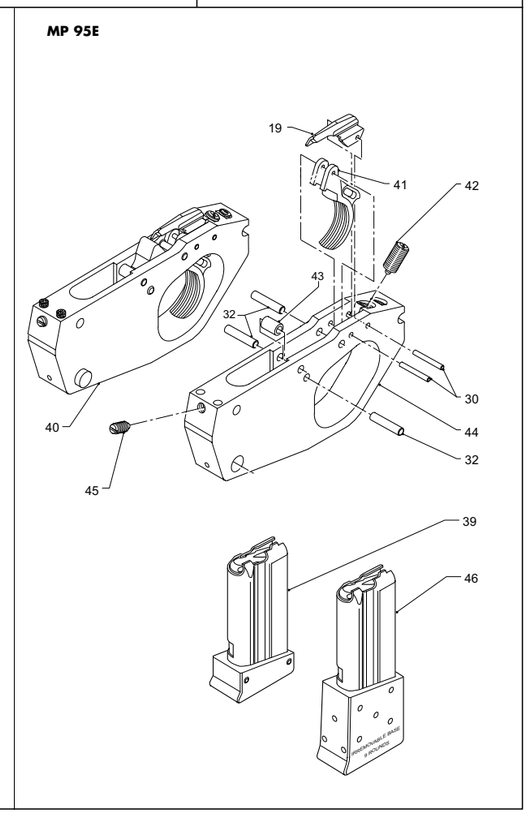

40.02

No. Pos.	Código Proveedor	Descripción	P.Neto €	PISTOLS																				
				MP 90S				MP 90S WORLD CUP				MP 95E												
				22-gauge	32-gauge			22-gauge	32-gauge			22-gauge	32-gauge											
1	F0018903	Trigger group assembly, without safety catch		●																				
1	F0270800	Trigger group assembly, without safety catch anod.						●	●															
1	F0121400	Trigger group assembly, without safety catch Pist.			●																			
2	90005000	Clip button grub screw, blued		●	●			●	●			●	●											
3	G0124000	Clip button spring		●	●			●	●			●	●											
4	G0040800	Magazine release button, blued		●	●			●	●			●	●											
5	90003200	Button pin		●	●			●	●			●	●											
6	G0066400	Trigger guard rubber damper		●	●			●	●			●	●											
7	G0039800	Hammer spring		●	●			●	●			●												
7	G0231100	Hammer spring											●											
8	G0039602	Hummer spring plunger pin without safety catch		●	●			●	●			●	●											
9	90003400	Elastic pin		●	●			●	●			●	●											
10	G0496500	Hammer, chrome-plated						●	●															
10	G0058001	Hammer, chrome-plated Pist.		●	●							●	●											
11	G0042002	Disconnector, chrome-plated		●	●							●	●											
11	G0496400	Disconnector, chrome-plated						●	●															
12	G0040200	Disconnector return spring			●								●											
12	G0064300	Disconnector return spring		●				●	●			●												
13	G0041902	Trigger support		●	●																			
13	G0041903	Trigger support						●	●															
14	G0050200	Trigger, 7 mm width		●	●			●	●															
15	90005500	2nd pull adjustment bush grub screw		●	●			●	●															
16	90005700	Pin fastening grub screw		●	●			●	●															
17	G0039901	Pre-run adjusting pin		●	●			●	●															
18	90002600	Hammer stop elastic pin		●	●			●	●															
19	G0094300	Disconnector		●	●			●	●			●	●											
20	90002300	Trigger fastening screw		●	●			●	●															
21	G0040301	2nd pull adjustment bushing		●	●			●	●															
22	G0040400	2nd pull adjustment pin		●	●			●	●															
23	G0040500	2nd pull adjustment pin spring		●	●			●	●															
24	90013300	2nd pull adjustment screw		●	●			●	●															
25	90004900	Grub screw		●	●			●	●			●	●											

MP 90S WORLD CUP
MP 90S

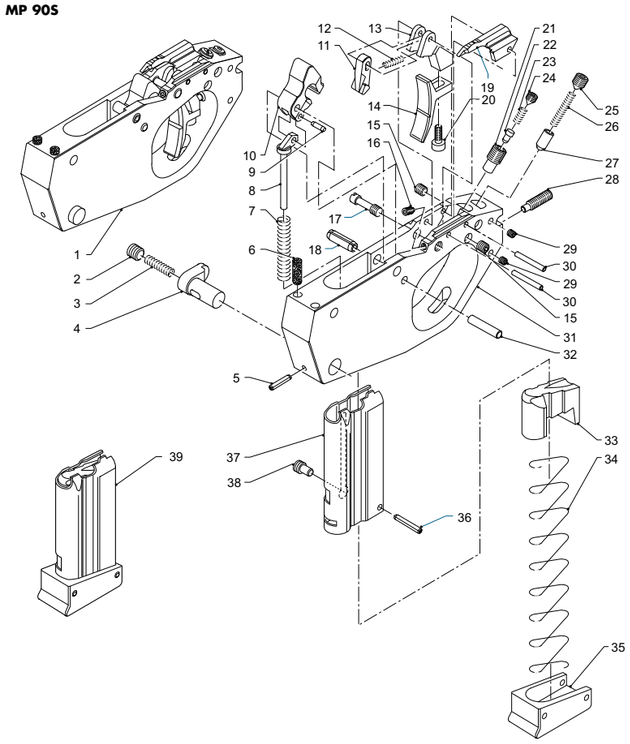

MP 95E

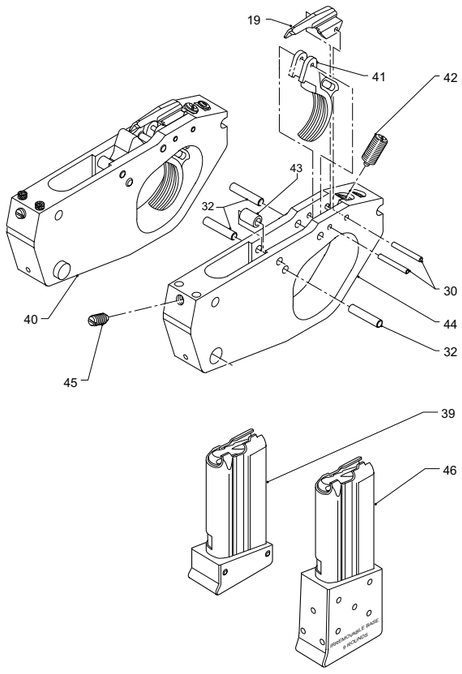

No. Pos.	Código Proveedor	Descripción	P.Neto €	PISTOLS																							
				MP 90S				MP 90S WORLD CUP				MP 95E															
				22-gauge	32-gauge			22-gauge	32-gauge			22-gauge	32-gauge														
26	G0040700	Pin spring		●	●			●	●			●	●														
27	G0040601	1st pull adjustment pin, nickel-plated		●	●			●	●			●	●														
28	90005100	Rear stop grub screw		●	●			●	●																		
29	90015800	Screw		●	●			●	●																		
30	90002500	Pin		●	●			●	●			●	●														
31	G0039301	Trigger group, without safety catch		●	●																						
31	G0039302	Trigger group, without safety catch						●	●																		
32	90002400	Pin		●	●			●	●			●	●														
33	G0041700	Cartridge support			●				●				●														
33	G0041203	Cartridge support, synthetic black		●				●				●															
34	G0041100	Magazine spring		●				●				●															
34	G0041600	Magazine spring			●				●				●														
34	G0078300	9-shot magazine spring		●				●				●															
35	G0041400	Magazine bottom			●				●				●														
35	G0063200	6-shot magazine bottom, synthetic black		●				●				●															
36	90003100	Elastic pin		●	●			●	●			●	●														
37	G0041300	Magazine housing			●				●				●														
37	G0063301	6-shot magazine housing, polished		●				●				●															
38	G0041800	Cartridge support pushbutton		●				●				●															
39	F0019400	5-shot magazine			●				●				●														
39	F0031301	6-shot magazine, synthetic black		●				●				●															
40	F0121800	Trigger group assembly, synthetic chrome-plated Pist.											●														
40	F0031601	Trigger group assembly, synthetic black										●															
40	F0121600	Trigger group assembly, synthetic black Pist.											●														
41	G0058100	Trigger, blued										●	●														
41	G0065500	Trigger, chrome-plated										●	●														
42	90007300	Pressure spring										●	●														
43	G0063101	Hammer stop spacer										●	●														
44	G0065303	Trigger guard, synthetic black										●	●														
45	90006200	Pressure spring										●	●														
46	F0036300	9-shot magazine synthetic black		●				●				●															

MP 90S - MP 95E

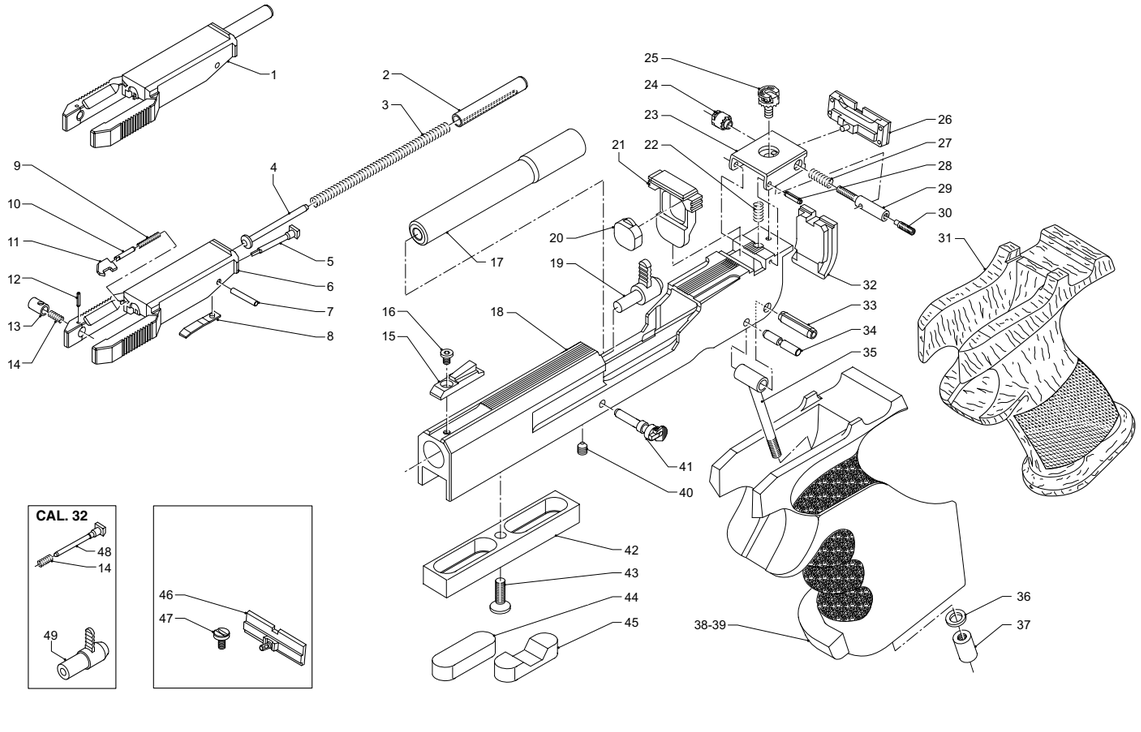

No. Pos.	Código Proveedor	Descripción	P.Neto €	PISTOLS																							
				MP 90S				MP 90S WORLD CUP				MP 95E															
				22-gauge	32-gauge			22-gauge	32-gauge			22-gauge	32-gauge														
1	F0032000	Bolt group, blued										●															
1	F0036800	Bolt group, blued											●														
1	F0271300	Bolt group, blued							●																		
1	F0036900	Bolt group, chrome-plated			●								●														
1	F0271200	Bolt group, chrome-plated		●																							
2	G0042701	Return spring bush		●	●			●	●			●	●														
3	G0042800	Return spring		●				●				●															
3	G0043700	Return spring			●				●				●														
4	G0042901	Return spring plunger pin		●	●			●	●			●	●														
5	G0042501	Firing pin		●				●				●															
6	G0066500	Bolt, blued										●															
6	G0071900	Bolt, blued											●														
6	G0496300	Bolt, blued						●																			
6	G0496600	Bolt, blued							●																		
6	G0066600	Bolt, chrome-plated		●																							
6	G0072900	Bolt, chrome-plated			●								●														
7	90008000	Retaining pin		●	●			●	●			●	●														
8	G0042600	Firing pin retaining plate, blued		●	●			●	●			●	●														
9	G0043000	Extractor spring		●	●			●	●			●	●														
10	G0066802	Extractor retaining pin, nickel-plated		●	●			●	●			●	●														
11	G0066901	Extractor, nickel-plated		●				●				●															
11	G0080301	Extractor, nickel-plated			●				●				●														
12	90003700	Elastic pin		●	●			●	●			●	●														
13	G0043301	Opening bolt stop pin, blued						●				●															
13	G0043901	Opening bolt stop pin, blued							●				●														
13	G0066701	Opening bolt stop pin, chrome-plated		●																							
13	G0080401	Opening bolt stop pin, chrome-plated			●								●														
14	G0043401	Bolt stop spring		●	●			●	●			●	●														
14	G0044000	Opening bolt stop spring and firing pin spring			●				●				●														
15	G0044601	Front sight, blued		●	●			●	●			●	●														
16	90002000	Fixing screw		●	●			●	●			●	●														
17	G0044100	Barrel			●								●														

MP 90S - MP 95E

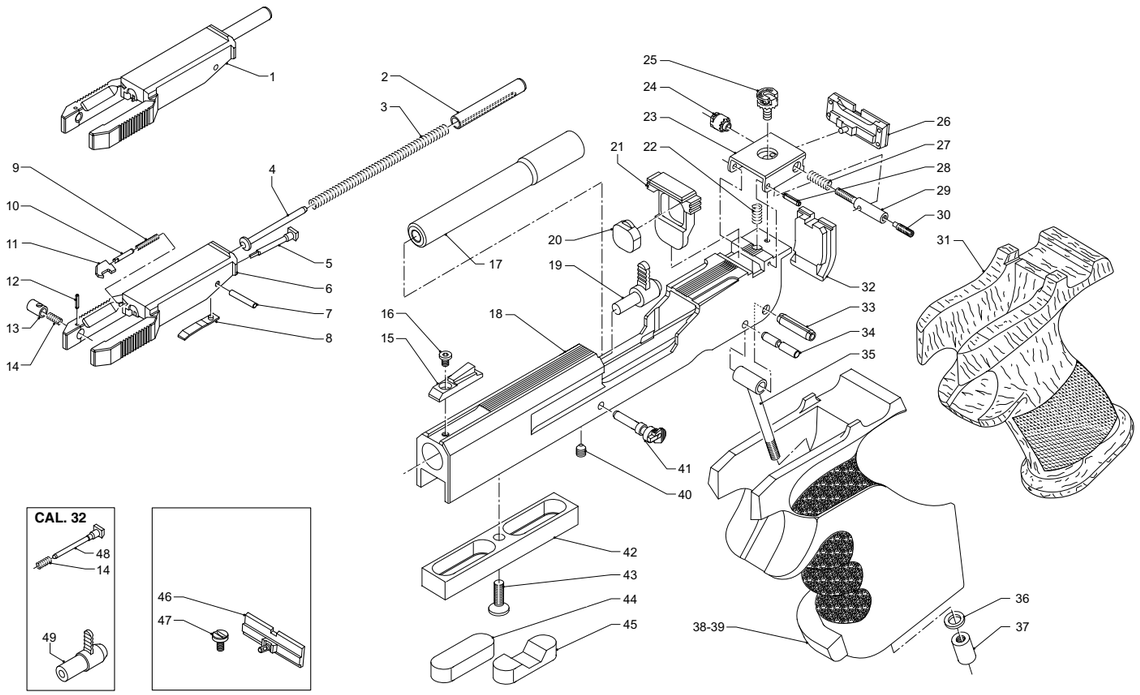

40.08

No. Pos.	Código Proveedor	Descripción	P.Neto €	PISTOLS																					
				MP 90S				MP 90S WORLD CUP				MP 95E													
				22-gauge	32-gauge			22-gauge	32-gauge			22-gauge	32-gauge												
17	G0044101	Barrel							●																
17	G0044800	Barrel, blued		●								●													
17	G0044801	Barrel, blued						●																	
18	G0067000	Barrel, blued										●													
18	G0079900	Barrel, blued											●												
18	G0495800	Breech, blued EUR (s.p.n.s.)						●																	
18	G0495900	Breech, blued EUR (s.p.n.s.)							●																
18	G0044201	Breech, blued EUR Pist. (s.p.n.s.)		●																					
18	G0044301	Breech, blued EUR Pist. (s.p.n.s.)			●																				
18	G0080000	Breech, chrome-plated											●												
19	G0093900	Firearm test spacer		●				●				●													
20	G0045001	Bolt recoil damper		●	●				●			●	●												
20	G0496700	Bolt recoil damper						●																	
21	G0044900	Bolt locking support, blued		●	●			●	●			●	●												
21	G0067700	Bolt locking support, chrome-plated											●												
22	G0045902	Spring		●	●			●	●			●	●												
23	G0062500	Rear sight support		●	●			●	●			●	●												
23	G0067800	Rear sight support, chrome-plated											●												
24	F0119200	Horizontal adjustment screw						●																	
24	G0045301	Horizontal adjustment screw, blued		●	●							●	●												
24	G0068001	Horizontal adjustment screw, chrome-plated											●												
25	F0119400	Vertical adjustment screw B, assembly						●																	
26	F0096001	Rear sight						●	●																
27	G0045201	Horizontal adjustment spring for rear sight		●	●			●	●			●	●												
28	90003200	Elastic pin		●	●			●	●			●	●												
29	G0045401	Rear sight pin, blued		●	●			●	●			●	●												
29	G0067901	Rear sight pin, chrome-plated											●												
30	90005600	Rear sight group		●	●			●	●			●	●												
31	G0068200	R.H./L.H.pistol grip (A standard)										●	●												
31	G0068300	R.H./L.H.pistol grip (lamell.)											●												
31	G0082400	R.H./L.H.pistol grip Arlecchino										●	●												
32	G0045701	Pistol grip spacer		●	●			●	●																

MP 90S - MP 95E

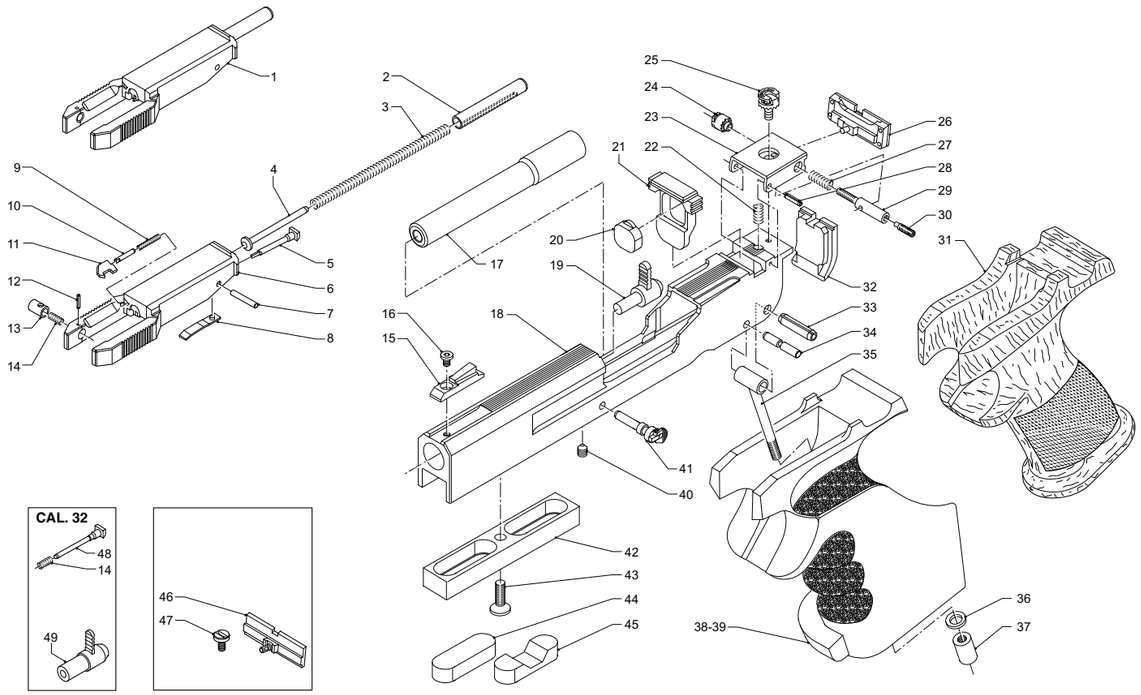

40.10

No. Pos.	Código Proveedor	Descripción	P.Neto €	PISTOLS																					
				MP 90S				MP 90S WORLD CUP				MP 95E													
				22-gauge	32-gauge			22-gauge	32-gauge			22-gauge	32-gauge												
33	90003900	Grip tie rod pin		●	●			●	●			●	●												
34	G0045801	Trigger guard fastening pin, blued		●	●			●	●			●	●												
34	G0066101	Trigger guard fastening pin, chromed-plated											●												
35	G0046101	Grip fastening pin, chrome-plated		●	●			●	●			●	●												
36	90004400	Washer		●	●			●	●			●	●												
37	G0046000	Pistol grip nut		●	●			●	●			●	●												
38	F0020302	R.H. pistol grip assembly, Nill griffe - large		●	●			●	●																
38	F0035901	R.H. pistol grip assembly, Nill griffe - small		●	●			●	●																
39	F0036001	L.H. pistol grip assembly, Nill griffe - large		●	●			●	●																
39	F0039801	L.H. pistol grip assembly, Nill griffe - small		●	●			●	●																
40	G0047200	Barrel fastening pin		●	●			●	●			●	●												
41	F0270700	Trigger guard fastening screw, assembly						●	●																
42	G0067400	Balancing weight support, black synthetic		●	●			●	●			●	●												
43	90001900	Fixing screw, blued		●	●			●	●			●	●												
44	G0050500	Balancing weight 40 gr.		●	●			●	●			●	●												
45	G0050600	Balancing weight 25 gr.		●	●			●	●			●	●												
46	G0063400	Rear sight (type A = 3,3 mm)		●	●							●	●												
46	G0063500	Rear sight (type B = 3,7 mm)		●	●							●	●												
47	G0045100	Vertical adjustment screw, blued		●	●							●	●												
47	G0068100	Vertical adjustment screw, chrome-plated											●												
48	G0043600	Firing pin			●				●				●												
49	G0094000	Firearm test spacer			●				●				●												
–	F0020500	Adjusting wrench kit assembly		●				●																	
–	F0020600	Adjusting wrench kit assembly			●				●																
–	90000300	Bent male Allen key UNI6753 ES.2,5										●	●												
–	90000400	Bent male Allen key UNI6753 ES.3										●	●												
–	90000500	Bent male Allen key UNI6753 ES.6										●	●												
–	G0047000	Trigger adjusting wrench		●	●			●	●																
–	G0046900	Trigger action adjusting wrench		●	●			●	●																

MP 90S - MP 95E

50

KITE

KITE

KITE YOUNG

50.01

KITE - KITE YOUNG

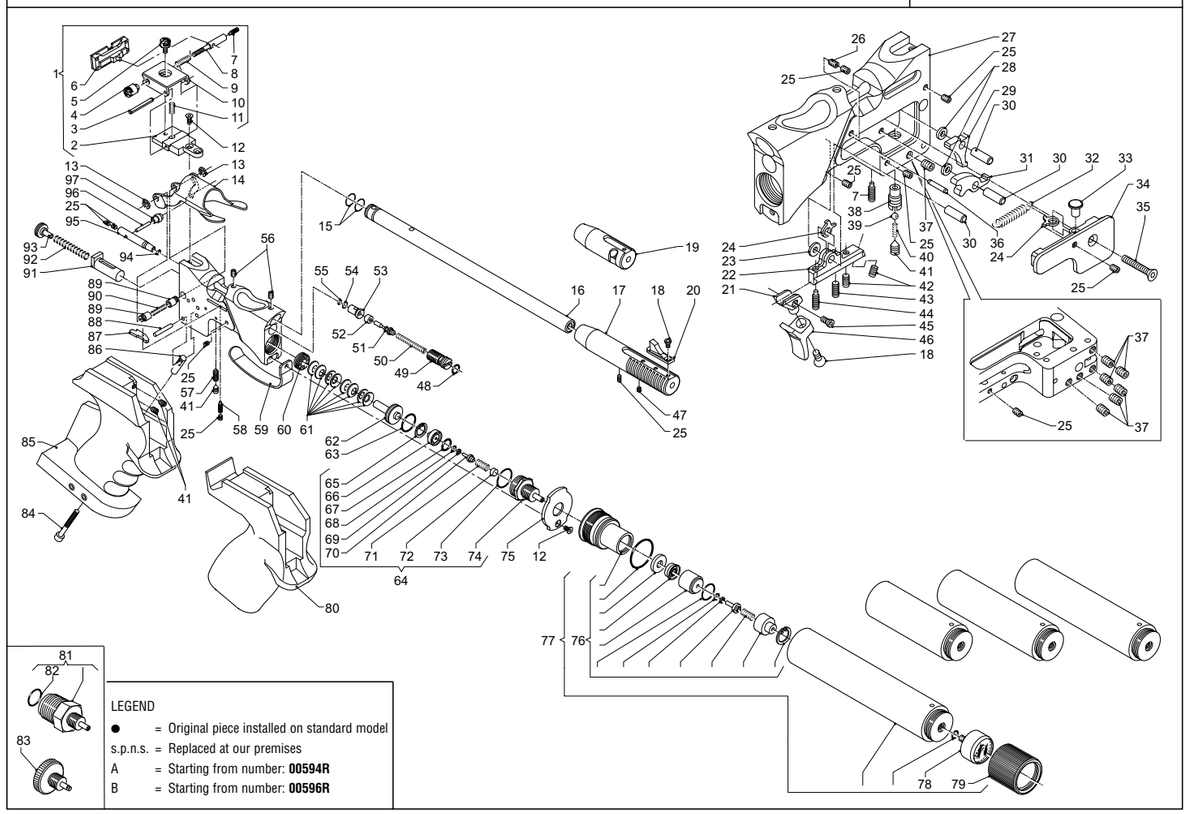

50.02

No. Pos.	Código Manual	Código Proveedor	Descripción	P.Neto €	PRE-COMPRESSED AIR PISTOLS	
					Kite	Kite Young
1	373Z	F0097301	Rear sight group		●A	●B
2	370Z	G0195400	Rear sight base		●	●
3	067P	G0045401	Safety spring		●	●
4	068Z	F0119200	Windage adjustment screw		●	●
5	071Z	F0119400	Elevation adjustment screw		●	●
6	113Z	F0096001	Rear sight assembly		●	●
7	076P	90005600	Rear sight grub screw		●	●
8	075P	90003200	Rear sight pin		●	●
9	074P	G0045201	Rear sight elevation adjustment spring		●	●
10	112P	G0062500	Rear sight support		●	●
11	069P	G0045902	Spring		●	●
12	371Z	90015500	Screw		●	●
13	084C	90006400	Stop ring		●	●
14	324Z	G0198501	Bolt control lever		●A	●B
15	348Z	90016800	O-Ring		●	●
16	060Z	G0254200	Kite barrel with holes		●	
16	060Z	G0254300	Kite Young barrel with holes			●
17	320Z-L	G0195001	Sight support compensator		●	●
18	063P	90002000	Sight fastening screw		●	●
19	320Z-C	G0253300	Sight support compensator, short (optional)		●	●
20	062Z	G0195301	Front sight (4 mm width)		●A	●B
20	062Z	G0195101	Front sight (5 mm width)		●A	●B
21	314Z	G0194300	Trigger attachment pin		●	●
22	014Z	G0194200	Trigger support		●	●
23	243F	90018700	Washer		●	●
24	316Z	G0198300	Trigger spring support		●	●
25	319Z	90015800	Grub screw		●	●
26	019P	90005700	Pin fastening grub screw		●	●
27	107Y	G0217201	Kite Young receiver (s.p.n.s.)			●
27	107Z	G0213901	Kite receiver (s.p.n.s.)		●	
28	318Z	G0192502	Washer		●	●
29	088Z	G0198201	Firing pin sear		●	●

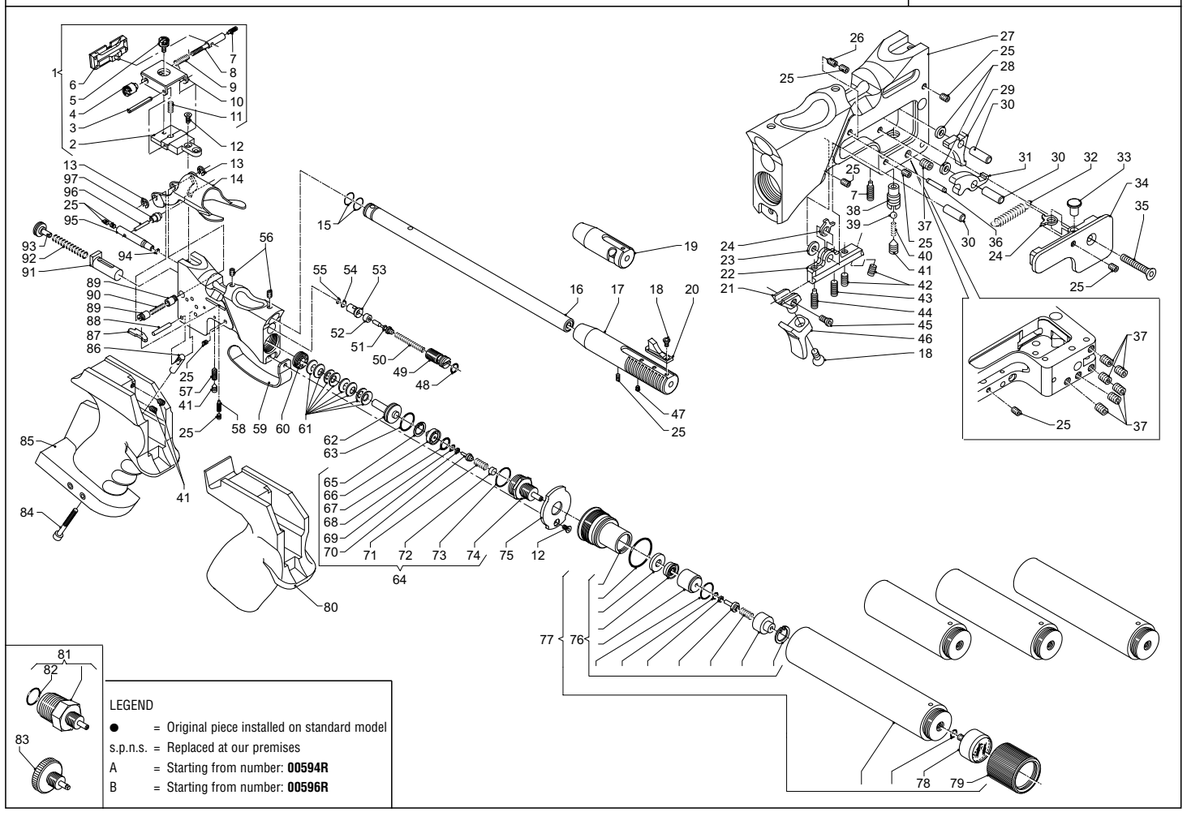

50.04

No. Pos.	Código Manual	Código Proveedor	Descripción	P.Neto €	PRE-COMPRESSED AIR PISTOLS	
					Kite	Kite Young
30	216Z	90018600	Pin TMP BR M6 ISO 8734 D.4		●A	●B
31	215Z	G0198101	Disconnector		●	●
32	025Z	G0198700	Trigger spring		●	●
33	384Z	G0227801	Trigger spring pin		●	●
34	322Z	G0196701	Side cover		●A	●B
35	323Z	90015400	Screw		●	●
36	006P	90003200	Safety spring		●	●
37	020P	90005500	Grub screw		●	●
38	021Z	G0209401	2nd pull adjustment screw bush		●	●
39	074C	90020400	Ball		●	●
40	023Z	G0200400	Disconnector spring		●	●
41	385Z	90013300	Grub screw		●	●
42	027Z	90006900	Grub screw		●	●
43	026Z	90015900	Grub screw		●	●
44	321Z	90016100	Grub screw		●	●
45	315Z	90018100	Screw		●	●
46	015Z	G0194400	Trigger		●	●
47	294W	G0185401	Cover threaded holes plug		●	●
48	355Z	90017900	O-Ring		●	●
49	354Z	G0193300	Front cap		●	●
50	378Z	G0200500	Spring		●	●
51	353Z	G0193200	Air valve		●	●
52	352Z	G0196200	Valve ring		●	●
53	351Z	G0200300	Valve guide bushing		●	●
54	350Z	90016700	O-Ring		●	●
55	349Z	90016600	O-Ring		●	●
56	082Z	90016500	Barrel fastening pin		●	●
57	346Z	90006200	Presser		●	●
58	028P	90002500	Pin		●	●
59	347Z	G0198001	Trigger guard		●A	●B
60	369Z	G0196100	Washer adjustment ring nut		●	●
61	368Z	90015300	Belleville washer		●	●

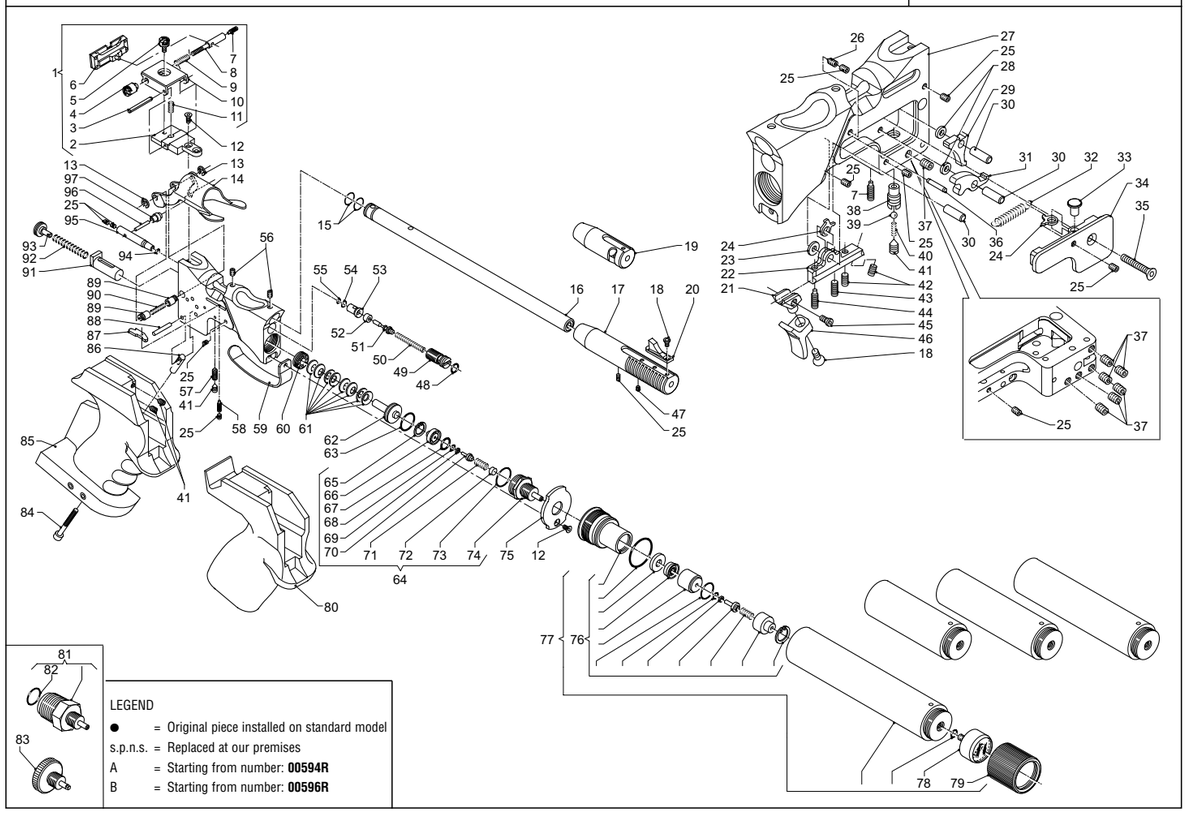

50.06

No. Pos.	Código Manual	Código Proveedor	Descripción	P.Neto €	PRE-COMPRESSED AIR PISTOLS	
					Kite	Kite Young
62	367Z	G0194501	Belleville washer support		●	●
63	366Z	90017301	O-Ring		●A	●B
64	471Z	F0097101	Magazine coupling pin assembly		●	●
65	365Z	90016300	Snap ring		●	●
66	364Z	G0192701	Stop bushing		●	●
67	363Z	90017201	O-Ring		●	●
68	362Z	90017400	O-Ring		●	●
69	361Z	G0192800	Support O-Ring		●	●
70	360Z	G0192600	Ring support		●	●
71	335Z	G0198600	Magazine valve spring		●	●
72	359Z	G0197500	Air filter		●	●
73	358Z	90017100	O-Ring		●	●
74	357Z	G0194601	Magazine coupling pin		●	●
75	356Z	G0194701	Magazine coupling flange		●	●
76	472Z	F0097200	Magazine valve assembly		●	●
77	372Z-C	F0108201	Magazine tube assembly, blue (short) (see accessories)		●	●
77	372Z-C	F0096901	Magazine tube assembly, black (short) (see accessories)		●	●
77	372Z-C	F0108501	Magazine tube assembly, red (short) (see accessories)		●	●
77	372Z-I	F0122401	Magazine tube assembly, blue (intermediate) (see accessories)		●	
77	372Z-L	F0108001	Magazine tube assembly, blue (long) (see accessories)		●	
77	372Z-L	F0096701	Magazine tube assembly, black (long) (see accessories)		●	
77	372Z-L	F0108301	Magazine tube assembly, red (long) (see accessories)		●	
77	372Z-M	F0108101	Magazine tube assembly, blue (medium) (see accessories)		●	●
77	372Z-M	F0096801	Magazine tube assembly, black (medium) (see accessories)		●	●
77	372Z-M	F0108401	Magazine tube assembly, red (medium) (see accessories)		●	●
78	330Z	F0095901	Pressure gauge assembly 0-400 bar (s.p.n.s.)		●A	●B
79	329Z	G0195900	Pressure gauge guard ring		●	●
80	111Z	G0253200	R.H./L.H.pistol grip		●	●
81	376Z	G0195800	Magazine coupling adapter without O-Ring		●	●
82	375Z	90017700	O-Ring		●	●
83	374Z	G0195700	Air pin		●	●
84	089Z	90015600	Screw		●	●

KITE - KITE YOUNG

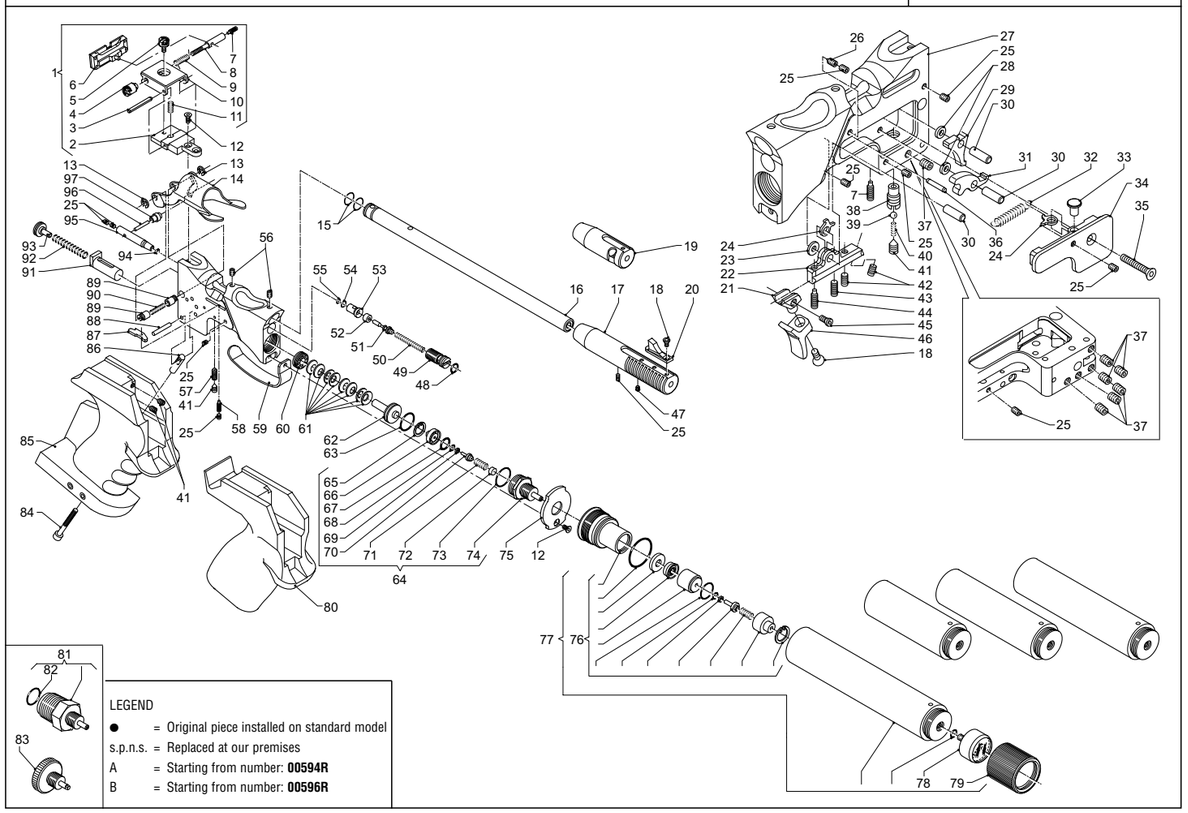

50.08

No. Pos.	Código Manual	Código Proveedor	Descripción	P.Neto €	PRE-COMPRESSED AIR PISTOLS																				
					Kite	Kite Young																			
85	134Z-L	F0099201	R.H. pistol grip assembly, Nill griffe - large		●	●																			
85	134Z-M	F0099101	R.H. pistol grip assembly, Nill griffe - medium		●	●																			
85	134Z-S	F0099001	R.H. pistol grip assembly, Nill griffe - small		●	●																			
85	135Z-L	F0099501	L.H. pistol grip assembly, Nill griffe - large		●	●																			
85	135Z-M	F0099401	L.H. pistol grip assembly, Nill griffe - medium		●	●																			
85	135Z-S	F0099301	L.H. pistol grip assembly, Nill griffe - small		●	●																			
86	080Z	G0195500	Pistol grip rod		●	●																			
87	345Z	G0198400	Firing pin lock lever		●	●																			
88	010W	90008900	Pistol grip rod needle		●	●																			
89	325Z	G0192902	Lever rotation pin, 2 parts		●A	●B																			
90	011A	G0124000	Trigger spring		●	●																			
91	104Z	G0194901	Firing pin		●	●																			
92	037Z	G0198800	Firing pin spring		●	●																			
93	377Z	G0194800	Rear cap		●	●																			
94	328Z	90017500	O-Ring		●	●																			
95	105Z	G0193001	Bolt		●A	●B																			
96	326Z	90016200	Needle		●	●																			
97	327Z	G0193101	Bolt guide pin		●	●																			
–	–	F0129600	Barrel counterweight assembly, blued mat finish		●	●																			
–	–	F0122500	Trigger counterweight assembly		●	●																			
–	–	F0099600	Adjusting kit assembly		●	●																			

Notas

Despieces Benelli 2014

Beretta Benelli Ibérica, S.A.

Bº Santiago, s/n - 01191 TRESPUENTES (Álava)
Apartado 548 - 01080 Vitoria - Alava

info@bbi.es www.bbi.es

Alcance: distribución